COOK RESIDENCE RENOVATION & ADDITION

1317-1319 ADAMS ST. NEW ORLEANS, LA 70118

SHEET LEGEND: ARCHITECTURAL

DRAWING NO.
SIM
1
A101
SECTION REFERENCE
SHEET NO.

Ref
DRAWING NO.
1
Ref
A101
1
Ref
1
Ref
ELEVATION REFERENCE
SHEET NO.

1 Ref
DRAWING NO.
Ref
A101
Ref
1 Ref
SHEET NO.
INTERIOR ELEVATION REFERENCE

Room name
101
CLG: Ceiling Height
ROOM TAG, RE. SCHED.

Room name
101
Ceiling Material
Wall Material
Floor Material
ROOM FINISH TAG, RE. SCHED.

1A — WALL TAG. RE: SCHEDULES
1t — WINDOW TAG. RE: SCHEDULES
101 — DOOR TAG. RE: SCHEDULES
1 — REVISION NUMBER
XX-# — SELECTION TAG. RE. SCHED.
WOOD THRESHOLD

ABBREVIATIONS

A/C	AIR CONDITIONING	HVAC	HEATING,VENTILATION,& A/C
A.F.F.	ABOVE FINISHED FLOOR	H.W.	HOT WATER HEATER
A.F.G.	ABOVE FINISHED GRADE	I.A.W.	IN ACCORDANCE WITH
ALT.	ALTERNATE	INSUL.	INSULATION
BDB	BEADED-BOARD	INT.	INTERIOR
BLDG.	BUILDING	MFR	MANUFACTURER
CL	CENTERLINE	MAX.	MAXIMUM
CLG	CEILING	MECH.	MECHANICAL
CLR	CLEARANCE	MIN.	MINIMUM
CMU	CONCRETE MASONRY UNIT	N.I.C.	NOT IN CONTRACT
CONC.	CONCRETE	N.T.S.	NOT TO SCALE
CONT.	CONTINUOUS	O.C.	ON CENTER
C.J.	CONTROL JOINT	PLUMB.	PLUMBING
COORD.	COORDINATE	PT	PAINT
DECOR.	DECORATIVE	PLY.	PLYWOOD
DTL.	DETAIL	PL	PROPERTY LINE
DIAM.	DIAMETER	PTL	PRESSURE TREATED WOOD
DIM.	DIMENSION	PRIM.	PRIMARY
DN	DOWN	P.V.	PHOTOVOLTAIC
D.S.	DOWNSPOUT	RE.	REFERENCE
ELEC.	ELECTRICAL	REQ.	REQUIRED
ELEV.	ELEVATION	R.D.	ROOF DRAIN
EQ	EQUAL	RM	ROOM
EQUIP.	EQUIPMENT	SCHED.	SCHEDULE
E.J.	EXPANSION JOINT	SECT.	SECTION
EXT.	EXTERIOR	SIM.	SIMILAR
E.T.R.	EXISTING TO REMAIN	SHTG.	SHEATHING
F.B.O.	FURNISHED BY OWNER	SPEC.	SPECIFIED
F.D.	FLOOR DRAIN	STRUC.	STRUCTURAL
FLASH.	FLASHING	TEM.	TEMPERED
FLR	FLOOR	THK	THICK
FIN.	FINISH	T&G	TONGUE & GROOVE
F.F.L.	FINISHED FLOOR LEVEL	TYP.	TYPICAL
GC	GENERAL CONTRACTOR	VERT.	VERTICAL
GYP.	GYPSUM BOARD	V.I.F.	VERIFY IN FIELD
HT.	HEIGHT	W/	WITH
HOR.	HORIZONTAL	WDW	WINDOW
HR	HOUR	WC	WATER CLOSET

HATCH INDICATES PROJECT LOCATION (1317-1319 ADAMS ST.)

KEY PLAN

SCALE: N.T.S.

SHEET INDEX

Page Number	Sheet Number	Sheet Name	Sheet Issue Date
GENERAL			
1	T001	COVER SHEET & GENERAL PROJECT INFO	06/20/2024
2	T002	GENERAL NOTES, PROJECT KEYNOTES, & CODE REVIEW	06/20/2024
ARCHITECTURAL - SITE			
3	A100	SITE PLAN, ZONING, SURVEY, & ELEV. CERT.	08/20/2024
STRUCTURAL			
4	S1.0A	GENERAL STRUCTURAL NOTES	11/18/2024
5	S1.0B	GENERAL STRUCTURAL NOTES	11/18/2024
6	S1.1	FOUNDATION / CMU LAYOUT PLAN	11/18/2024
7	S1.2	FIRST FLOOR FRAMING PLAN	11/18/2024
8	S1.3	FOUNDATION SECTIONS	11/18/2024
9	S1.4	FOUNDATION SECTIONS	11/18/2024
10	S2.0	SECOND FLOOR FRAMING PLAN	11/18/2024
11	S2.1	SECOND FLOOR CEILING PLAN	11/18/2024
12	S2.2	ROOF FRAMING PLAN	11/18/2024
13	S2.3	FRAMING SECTIONS	11/18/2024
14	S2.4	FRAMING SECTIONS	11/18/2024
15	S2.5	FRAMING DETAILS	11/18/2024
16	S2.6	FRAMING DETAILS	11/18/2024
17	S2.7	FRAMING DETAILS	11/18/2024
ARCHITECTURAL - DEMOLITION			
18	D101	EXISTING / DEMO FIRST FLOOR PLAN & NOTES	06/20/2024
19	D201	EXISTING / DEMO EXTERIOR ELEVATIONS & NOTES	06/20/2024
20	D202	EXISTING / DEMO EXTERIOR ELEVATIONS & NOTES	06/20/2024
ARCHITECTURAL - PROPOSED			
21	A101	PROPOSED FIRST FLOOR PLAN & NOTES	07/11/2024
22	A102	PROPOSED SECOND FLOOR PLAN & NOTES	07/11/2024
23	A201	PROPOSED EXTERIOR ELEVATIONS & NOTES	07/11/2024
24	A202	PROPOSED EXTERIOR ELEVATIONS & NOTES	07/11/2024
25	A203	PROPOSED STREET ELEVATIONS & NOTES	02/12/2025
26	A301	PROPOSED BUILDING SECTIONS & NOTES	10/04/2024
27	A501	CONSTRUCTION SECTION DETAILS	11/18/2024
28	A502	CONSTRUCTION DETAILS	12/20/2024
29	A601	DOOR, WINDOW, & WALL SCHEDULE & NOTES	10/04/2024
ARCHITECTURAL - ID			
30	A800	ROOM MATERIAL/FINISH SCHEDULE & NOTES, INTERIOR DETAILS	09/06/2024
31	A801	INTERIOR DETAILS	12/11/24
32	A802	INTERIOR FIRST FLOOR FINISH PLAN & NOTES	09/06/2024
33	A803	INTERIOR SECOND FLOOR FINISH PLAN & NOTES	09/06/2024
34	A804	INTERIOR ELEVATIONS & NOTES	09/06/2024
35	A805	INTERIOR ELEVATIONS & NOTES	10/25/2024
36	A806	INTERIOR ELEVATIONS & NOTES	12/13/24
37	A807	INTERIOR ELEVATIONS & NOTES	09/06/2024
38	A808	INTERIOR PERSPECTIVES	09/06/2024
ARCHITECTURAL - M.E.P.			
39	A900	M.E.P. LEGEND & GENERAL NOTES	09/06/2024
40	A901	FIRST & SECOND FLOOR M.E.P. DIAGRAM & NOTES	09/06/2024

SCOPE OF WORK

RENOVATION & ADDITION OF AN EXISTING DUPLEX AND THE RENOVATION/DEMOLITION OF AN ACCESSORY STURCUTRE AS PER DRAWINGS. NEW PAINT EXTERIOR & INTERIOR. NEW M.E.P. THROUGHOUT. NEW FRAMING & FOUNDATION AS PER DRAWINGS. NEW INT. & EXTERIOR FINISHES AS PER DRAWINGS.

SQUARE FOOTAGES

EXISTING

1317 FIRST FLOOR: 887 SQ.FT.
1319 FIRST FLOOR: 654 SQ.FT.
FIRST FLOOR COMBINED: 1,541 SQ.FT.
FRONT PORCH: 147 SQ.FT.

TOTAL UNDER BEAM: 1,688 SQ.FT.

PROPOSED

1317 FIRST FLOOR: 887 SQ.FT.
ADDITION: 586 SQ.FT
1319 FIRST FLOOR: 654 SQ.FT.
ADDITION: 319 SQ.FT.
FRONT PORCH: 147 SQ.FT.
REAR PORCH: 269 SQ.FT.
FIRST FLOOR COMBINED: 2,862 SQ.FT.
1317 SECOND FLOOR: 694 SQ.FT

TOTAL UNDER BEAM: 3,556 SQ.FT.
ADDITION: 1,868 SQ.FT.

ZONING INFORMATION

MUNICIPAL DISTRICT: 7
SQUARE / BLOCK: 159
LOT: 3-A/019

PARISH: ORLEANS
ZONING DISTRICT: HU-RD2
SITE AREA: 5,880 SQ.FT.

ARCHITECT:

ADAMICK ARCHITECTURE
3301 Chippewa Street
New Orleans, LA 70115

504.322.1220

Contact: Alec Adamick
E-mail: alec@adamickarchitecture.com

STRUCT. ENGINEER:

AXIS ENGINEERING
3500 N. Causeway Blvd
#1100
Metairie, LA 70002

504.380.0800

Contact: James Heaslip
E-mail: james@Axisengr.com

CONTRACTOR:

T.B.D.

OWNER:

SHELLY & JOHN COOK
206 Deerfeild Lane
Franklin, TN 37069

615.289.9747
615.289.9716

Contact: Shelly Cook
E-mail: shelly.griffin.cook@gmail.com
Contact: John Cook
E-mail: jcooktn@gmai.com

ADAMICK ARCHITECTURE
3301 CHIPPEWA STREET
NEW ORLEANS, LA 70115
504.322.1220

No.	Description	Date

20 DEC. 2024	CD-100%
16 DEC. 2024	CD-85%
18 NOV. 2024	CD-75%
28 OCT. 2024	DD-3
18 SEP. 2024	DD-2
06 SEP. 2024	DD-1
20 AUG. 2024	SD-3
30 JUL. 2024	SD-2
11 JUL. 2024	SD-1
20 JUN. 2024	EC-1

Project: #2024-19

COOK RESIDENCE RENOVATION & ADDITION

ADDRESS:
1317-1319 ADAMS ST. NEW ORLEANS, LA 70118

COVER SHEET & GENERAL PROJECT INFO

ALEXANDER JAMES ADAMICK
REG. NO. 8148
STATE OF LOUISIANA
REGISTERED ARCHITECT

DATE:	2/12/2025 12:53:48 PM
PROJECT NO.:	2024-19
DRAWING BY:	CH/IF
CHECKED BY:	AJA
SHEET NO.:	T001
CAD FILE NO: 2024-19\PDF OUT\EC	1 / 39

New Orleans City Planning Commission
Design Advisory Committee

Supplement 'A' – Additional Submittal Requirements for the University Area Design Overlay

Narrative Addressing Compliance with Design Goals

A descriptive narrative addressing how the design addresses the design review approval standards found in **Article 4, Section 4.5**, including compatibility with adjacent property, landscape and open space, circulation systems, and building design strategies to enhance surrounding community.

A descriptive narrative addressing how the design addresses the building design standards of the base zoning district, if applicable.

A descriptive narrative of how the proposal addresses the standards of the University Area Design Overlay standards found in **Article 18, Section 18.32.B.3**. The design shall be compatible in character, scale, and spatial relationships with existing residential development on the same and opposite block faces and surrounding neighborhood character. In conducting its design review, the staff shall consider changes to scale, massing, articulation, and roof form to ensure compatibility with existing development. For design guidelines, reference the City of New Orleans Historic District Landmarks Commission (HDLC) Guidelines for New Construction, Additions and Demolition.

Context Drawings √

Contextual drawings that are drawn to scale and show the streetscape, including the proposed structure and adjacent structures. Label the height of the adjacent structures. If there are not any examples of the proposed architectural style on the same block face, but that are prevalent in the nearby area, please provide precedent images from within the surrounding area. See the attachment for an example.

Zoning Description Form

This review is limited to compliance with the design review approval standards found in **Article 4, Section 4.5,** the additional design review approval standards for the University Area Design Overlay found in **Article 18, Section 18.32**, and applicable building design standards for the base zoning district. Prior to submittal of the design review application, the applicant shall verify compliance with other applicable Comprehensive Zoning Ordinance requirements (e.g., bulk, yard, and parking) with the Department of Safety and Permits.

Base Zoning District:			
Bulk Regulations	**Requirement**	**Provided**	**Waiver Necessary?**
Minimum Lot Area	1800 SQ.FT.	5885 SQ.FT.	No
Minimum Lot Width	30'-0"	49'-0½"	No
Minimum Lot Depth	90'-0"	120'-0"	No
**Maximum Building Height*	35'-0"	26'-4⅜"	No
Minimum Permeable Open Space	30%	30%	No
Minimum Open Space	120 SQ.FT. DU	873 SQ.FT. DU	No
Maximum Impervious Surface in Front Yard	40% LOT SQ.	N.V.	No
Maximum Impervious Surface in Corner Side Yard	—	—	—
Minimum Yard Requirements	**Requirement**	**Provided**	**Waiver Necessary?**
Front Yard	11.3.A.2	7'-9"	No
Interior Side Yard	3'-0"	4'-6¼", 6'-8¾"	No
Corner Side Yard	—	—	—
Rear Yard	20% Lot Depth or 15'	15'-0"	No
*****Parking**	**Requirement**	**Provided**	**Waiver Necessary?**
	1	1	No

* Pursuant to **Article 18, Section 18.32.B.4**, in the HU-RD1, HU-RD2, and HU-RS Districts, building height of any new structure, or addition or enlargement or an existing structure, is limited to no more than 30 feet, or to three (3) feet higher than the taller of the immediately adjacent structures, whichever is less.
**Waivers of height requirements may be considered by the Board of Zoning Adjustments.
***Confirm the off-street parking requirements of both Article 22 and Article 18, Section 18.30 University Area Off-Street Parking Overlay District are met.

PROJECT GENERAL NOTES

1. ALL WORK SHALL CONFORM TO THE REQUIREMENTS OF THE NEW ORLEANS CITY BUILDING CODE, FIRE DEPARTMENT REGULATIONS, UTILITY COMPANY REQUIREMENTS, AND THE BEST TRADE PRACTICES.
2. BEFORE COMMENCING WORK, THE CONTRACTOR SHALL FILE ALL REQUIRED CERTIFICATES OF INSURANCE WITH THE DEPARTMENT OF BUILDINGS, OBTAIN ALL REQUIRED PERMITS, AND PAY ALL FEES REQUIRED BY GOVERNING ORLEANS PARISH AGENCIES.
3. THIS AGREEMENT BETWEEN OWNER AND ARCHITECT DOES NOT INCLUDE CONSTRUCTION PHASE SERVICES UNLESS OTHERWISE NOTED. ACCEPTANCE OF THESE DRAWINGS BY THE OWNER SIGNIFIES THEIR AGREEMENT THAT THE OWNER SHALL BE SOLELY RESPONSIBLE FOR INTERPRETING THESE DRAWINGS AND OBSERVING THE WORK OF THE CONTRACTOR TO DISCOVER, CORRECT OR MITIGATE ERRORS, INCONSISTENCIES AND OMISSIONS, AND THAT IF THE OWNER AUTHORIZES DEVIATIONS, RECORDED OR UNRECORDED, FROM PLANS PREPARED BY THE ARCHITECT, THE OWNER SHALL NOT BRING ANY CLAIM AGAINST THE ARCHITECT AND SHALL FULLY INDEMNIFY AND HOLD THE ARCHITECT, ITS PARTNERS, ASSOCIATES AND EMPLOYEES HARMLESS FROM AND AGAINST CLAIMS, LOSSES, DAMAGES AND EXPENSES, INCLUDING BUT NOT LIMITED TO DEFENSE COSTS AND THE TIME OF THE ARCHITECT, TO THE EXTENT THAT SUCH CLAIM, LOSS, DAMAGE OR EXPENSE ARISES OUT OF OR RESULTS IN WHOLE OR IN PART FROM SUCH DEVIATIONS, REGARDLESS OF WHETHER OR NOT SUCH CLAIM, LOSS, DAMAGE OR EXPENSE IS CAUSED IN PART BY A PARTY INDEMNIFIED UNDER THIS PROVISION.
4. ALL CONTRACTORS ARE RESPONSIBLE FOR NOTIFYING THE ARCHITECT / BUILDING OWNER OF ANY ERRORS, OMISSIONS, OR DISCREPANCIES PRIOR TO BIDDING THE PROJECT.
5. CONTRACTOR SHALL ASK FOR DETAILS WHENEVER UNCERTAIN ABOUT METHODS OF INSTALLATION. LACK OF DETAILS NOT REQUESTED SHALL NOT EXCUSE IMPROPER INSTALLATION, AND CORRECTION SHALL BE MADE THE RESPONSIBILITY OF THE CONTRACTOR.
6. THESE DRAWINGS ARE COMPLEMENTARY TO ONE ANOTHER. WHAT IS CALLED FOR BY ONE SHALL BE BINDING AS IF CALLED FOR BY ALL AND ALL PARTIES INVOLVED SHALL BECOME FAMILIAR WITH ALL SHEETS OF DRAWINGS AND SPECIFICATIONS (IF ANY) AND NOT SIMPLY THEIR OWN WORK IN ORDER TO FULLY UNDERSTAND AND DEVELOP THE CONSTRUCTION.
7. MINOR DETAILS NOT USUALLY SHOWN OR SPECIFIED, BUT NECESSARY FOR PROPER CONSTRUCTION OF ANY PART OF THE WORK SHALL BE INCLUDED AS IF THEY WERE INDICATED IN THE DRAWINGS.
8. THE CONTRACTOR SHALL COORDINATE ALL WORK PROCEDURES WITH REQUIREMENTS OF LOCAL AUTHORITIES AND BUILDING MANAGEMENT.
9. NO WORK SHALL BE CONCEALED UNTIL APPROVED BY REGULATORY INSPECTORS.
10. ALL CONSTRUCTION SHALL COMPLY WITH CITY, STATE AND NATIONAL CODES AS REQUIRED.
11. CONTRACTOR TO WARRANTEE ALL WORK FOR ONE YEAR.
12. SITE SHALL BE LEFT NEAT DAILY. PROVIDE COMPLETE CLEAN UP ON A WEEKLY BASIS. NO TRASH STORED IN BUILDING. PROPER DISPOSAL REQUIRED.
13. OWNER SHALL PAY FOR ALL WATER AND POWER USED TOWARD CONSTRUCTION, FROM EXISTING SOURCES.
14. ALL EXISTING MEANS OF EGRESS FOR TENANTS OF THE BUILDING TO BE MAINTAINED CLEAR AND FREE OF ALL OBSTRUCTIONS, SUCH AS BUILDING MATERIALS, TOOLS, ETC.
15. ALL BUILDING MATERIALS STORED AT CONSTRUCTION AREA, AND/OR IN ANY AREA OF THE BUILDING ARE TO BE SECURED IN A LOCKED AREA. ACCESS TO SUCH AREAS TO BE CONTROLLED BY OWNER AND/OR GENERAL CONTRACTOR.
16. DEBRIS, DIRT, AND DUST TO BE KEPT TO A MINIMUM, AND BE CONFINED TO THE IMMEDIATE CONSTRUCTION AREA; AND BE CLEANED UP AND CLEARED FROM BUILDING PERIODICALLY TO AVOID ANY EXCESSIVE ACCUMULATION.
17. THE CONTRACTOR SHALL BE RESPONSIBLE FOR THE PROTECTION OF ALL CONDITIONS AND MATERIALS WITHIN THE PROPOSED CONSTRUCTION AREA, INCLUDING AFTER HOURS.
18. THE CONTRACTOR SHALL DESIGN AND INSTALL ADEQUATE SHORING AND BRACING FOR ALL STRUCTURAL OR REMOVAL TASKS. THE CONTRACTOR SHALL HAVE SOLE RESPONSIBILITY FOR ANY DAMAGE OR INJURIES CAUSED BY OR DURING THE EXECUTION OF THE WORK.
19. CONTRACTOR SHALL KEEP AN ACCURATE RECORD OF ALL CHANGES AND SHALL MARK SAME IN INK ON A SEPARATE, CLEAN SET OF THESE DRAWINGS DURING THE CONSTRUCTION, INCLUDING LOCATION OF ALL UNDERGROUND UTILITIES. CONTRACTOR SHALL FURNISH OWNER AND ARCHITECT EACH A COPY OF THIS RECORD BEFORE FINAL COMPLETION AND ACCEPTANCE IS RECORDED.
20. THE CONTRACTOR SHALL LAY OUT HIS OWN WORK, AND SHALL PROVIDE ALL DIMENSIONS REQUIRED FOR OTHER TRADES (PLUMBING, ELECTRICAL,MECHANICAL, ETC.).
21. FINISH SUBMITTALS - FOR PURPOSES OF ABSOLUTE CONFIRMATION, THE CONTRACTOR SHALL SUBMIT TWO "FINISH SAMPLE SUBMITTALS" FOR ANY/ALL ITEM(S) THAT NEEDS AND/OR HAS/HAVE A CHOICE OF FINISH OR COLOR TO BE SELECTED AS WELL AS ANY/ALL ITEM(S) LISTED ON THE DRAWINGS OR SPECIFICATIONS REQUIRING THAT FINISHES BE SELECTED BY THE ARCHITECT OR OWNER. THE FIRST SAMPLE(S) WILL BE RETURNED AND SIGNED "APPROVED" INITIALED, AND DATED BY THE ARCHITECT ONLY WHEN THAT FINISH HAS BEEN APPROVED. THE OTHER SAMPLE(S) WILL BE USED AS A CONTROL SAMPLE. THE FINISH SAMPLE SUBMITTAL MUST BE SIGNED "APPROVED", INITIALED AND DATED BEFORE THAT ITEM IS CONSIDERED APPROVED BY THE ARCHITECT.
22. THE PLUMBING, MECHANICAL, AND ELECTRICAL WORK SHALL BE PERFORMED BY PERSONS LICENSED IN THEIR TRADES, WHO SHALL ARRANGE FOR AND OBTAIN INSPECTIONS AND REQUIRED SIGN-OFFS.
23. THE CONTRACTOR SHALL DO ALL CUTTING, PATCHING, REPAIRING AS REQUIRED TO PERFORM ALL OF THE WORK INDICATED ON THE DRAWINGS, AND ALL OTHER WORK THAT MAY BE REQUIRED TO COMPLETE THE JOB.
24. THE CONTRACTOR, UPON COMPLETION OF THE WORK, SHALL APPLY FOR DEPARTMENT OF BUILDINGS INSPECTIONS AND SIGN-OFFS AS REQUIRED.
25. ALL DIMENSIONS ARE TO FACE OF FINISH, CENTER OF COLUMNS AND FENESTRATION, OR TO FACE OF BRICK AND EXTERIOR FACE OF EXTERIOR STUDS, UNLESS OTHERWISE NOTED ON THE DRAWINGS. WHEN DIMENSIONS ARE TO AN EXISTING WALL, COLUMN OR FENESTRATION, ALL DIMENSIONS SHALL BE FROM THE FACE OF EXISTING FINISH, UNLESS OTHERWISE NOTED ON THE DRAWINGS.
26. ALL PIPING AND WIRING SHALL BE REMOVED TO A POINT OF CONCEALMENT AND SHALL BE PROPERLY CAPPED OR PLUGGED.
27. AIR CONDITIONING WILL CONFORM TO IBC & NFPA. PROVIDE MANUAL RESET FIRESTADT (SETTING NOT TO EXCEED 136 DEGREES FAHRENHEIT) IN RETURN AIR A/C STREAMS.
28. ALL ELECTRICAL WORK SHALL BE IN STRICT ACCORDANCE WITH NATIONAL ELECTRICAL CODE, OSHA, STATE AND LOCAL REGULATIONS AND ORDINANCE ARS 40-1603.
29. ALL LIGHTING FIXTURES TO BE SELECTED BY OWNER AND INSTALLED BY CONTRACTOR, UNLESS NOTED IN FIXTURE SCHEDULE.
30. ALL MATERIALS SHALL BE NEW AND U.L. APPROVED UNLESS SPECIFICALLY DESIGNATED OTHERWISE.
31. CAULKING ON EXTERIOR SHALL BE TOP QUALITY SILICONE CAULK.
32. PAINT GRADE TO BE SHERWIN WILLIAM EMERALD INTERIOR OR EQUIVALENT. ALL WORK TO RECEIVE THREE (3) COATS. PAINT FINISH TO BE EGG-SHELL ON WALLS AND CEILINGS AND SEMI-GLOSS ON TRIM, UNLESS OTHERWISE SELECTED BY OWNER. COLOR AND FINISH TO BE SELECTED BY OWNER, AND VERIFIED BY CONTRACTOR PRIOR TO CONTRACT SIGNING. ALL PAINT TO BE HIGHEST QUALITY BY THE MANUFACTURER.
33. INTERIOR WALLS AND CEILINGS SHALL HAVE A FLAME SPREAD RATING OF 0-75 AND A SMOKE DEVELOPMENT RATING OF 0-450.
34. NEW 1/2" SHEETROCK LEVEL FOUR (4) FINISH FOR ALL WALLS & 5/8" SHEETROCK LEVEL FOUR (4) FOR CEILING UNLESS SPECIFIED OTHERWISE. CONTRACTOR TO VERIFY EXISTING AND PROPOSED FINISHES OF SHEETROCK SURFACES AND ASCERTAIN WITH OWNER WHETHER TO MATCH EXISTING OR UPGRADE FINISH, AND TO INCLUDE IN ORIGINAL BID AS REQUIRED.
35. ALL NEW AND RENOVATED BATHROOMS TO RECEIVE 1/2" LEVEL FOUR (4) MOISTURE RESISTANT SHEETROCK INSTALLED THROUGHOUT THE BATHROOM.
36. ALL BATT INSULATION SHALL HAVE CLASS "A" (0-25) FLAME SPREAD RATING IN COMPLIANCE WITH APPLICABLE CODE. MINIMUM R VALUES TO BE R-13 IN 2X4 STUD WALLS AND R-19 IN 2X6 STUD WALLS, R-13 IN FLOORS, AND R-30 IN CEILINGS.
37. USE 6 INCH STUDS AT PLUMBING WALLS. PROVIDE METAL "SHOES" IN FRAMING TO PROTECT PLUMBING AND ELECTRICAL.
38. PROVIDE A GALVANIZED METAL PAN WITH DRAIN AT A/C EVAPORATOR LOCATIONS AND PVC PAN BENEATH WASHING MACHINES LOCATED ABOVE FIRST FLOOR. CONTRACTOR TO VERIFY LOCATION OF A/C DRIP PAN DRAIN PIPE.
39. PROVIDE A TOP QUALITY INSULATING BLANKET FOR ALL NEW WATER HEATERS. TANKLESS WATER HEATERS SHALL NOT REQUIRED A BLANKET.
40. ALL CORNERS SHALL BE PROPERLY BRACED FOR WIND LOADS. A 48" WIDE SHEET OF PLYWOOD SHEATHING SHALL BE PROVIDED EVERY 20 FEET OF WALL LENGTH.
41. INSTALL 2X BLOCKING AT MID-SPAN WITHIN ALL NEW WALLS THAT HAVE CEILING HEIGHTS GREATER THAN 8'-0".
42. PROVIDE (2) 2X10 HEADERS FOR ALL NEW OPENINGS BETWEEN 3'-0" AND 5'-0" WIDE. PROVIDE (2) 2X8 HEADERS TO ALL NEW OPENINGS LESS THAT 3'-0" WIDE.
43. ALL NEW WOOD FRAMING AND FASTENERS SHALL COMPLY WITH THE WOOD FRAME CONSTRUCTION MANUAL 9WFCM) BY THE AMERICAN FOREST AND PAPER ASSOCIATION.
44. ALL NEW FRAMING LUMBER SHALL BE SOUTHERN YELLOW PINE, S4S, NO. 2 OR BETTER, 15% MAXIMUM MOISTURE CONTENT.
45. NEW PLYWOOD SUB-FLOORING SHALL BE 3/4 TONGUE AND GROOVE, APA RATED 48/24, NAILED AND GLUED TO FLOOR JOIST WITH 8D NAILS. NAIL SPACING SHALL BE 6" ON CENTER AT PANEL EDGES AND 12" ON CENTER AT INTERMEDIATE SUPPORTS.
46. TREATED WOOD:
    A. ALL NEW WOOD THAT COME INTO CONTACT WITH CONCRETE OR MASONRY SHALL BE TREATED. ALL EXPOSED EXTERIOR WOOD SHALL BE TREATED TO THE FOLLOWING SPECIFICATIONS.
    a. .25 TREATED WOOD NOT IN CONTACT WITH THE GROUND.
    b. .40 TREATED WOOD IN CONTACT WITH THE GROUND & MASONRY.
    c. .80 TREATED WOOD IN CONTACT WITH WATER.
47. PAINTED EXTERIOR WOOD: SHALL BE TREATED AND FULLY AIR DRIED BEFORE BACK, END AND EDGE PRIMING AND TWO (2) COATS OF PREMIUM GRADE EXTERIOR PAINT.
48. NATURAL EXTERIOR WOOD: SHALL BE FULLY CURED, SELECTED FOR STRAIGHTNESS AND QUALITY. MOSTLY FREE OF CHECKS, KNOTS, AND SPLITS AND TREATED WITH PREMIUM DECK SEALER.

PROJECT GENERAL NOTES (CONTINUED)

49. GUARDRAILS: GUARDS SHALL BE AT LEAST 36 INCHES HIGH MEASURED VERTICALLY TO THE TOP OF THE GUARD FROM THE SURFACE ADJACENT THERETO. OPEN GUARDS SHALL HAVE INTERMEDIATE RAILS OR AN ORNAMENTAL PATTERN SUCH THAT A SPHERE 4 INCHES IN DIAMETER SHALL NOT PASS THROUGH ANY OPENING UP TO A HEIGHT OF 34 INCHES. THE TRIANGULAR OPENINGS FORMED BY THE RISER, TREAD AND BOTTOM ELEMENT OF A GUARDRAIL AT THE OPEN SIDE OF A STAIR SHALL BE OF SUCH SIZE THAT A SPHERE 6 INCHES IN DIAMETER SHALL NOT PASS THROUGH THE TRIANGULAR OPENINGS. GUARDS SHALL BE REQUIRED IN ALL AREAS MORE THAN 30 INCHES OR 4 RISERS ABOVE THE FLOOR OR THE GRADE BELOW.
50. AS PER NFPA 101 - 2015 EDITION, SECTION 7.2.2.4.HANDRAILS ON STAIRS SHALL BE AT LEAST 34" INCHES AND NOT MORE THAN 38" INCHES ABOVE THE SURFACE OF THE TREAD. MEASURED VERTICALLY TO THE TOP OF THE RAIL FROM THE LEADING EDGE OF THE TREAD. NEW HANDRAILS SHALL PROVIDE A CLEARANCE OF AT LEAST 2-1/4 INCHES BETWEEN THE HANDRAIL AND THE WALL TO WHICH IT IS FASTENED. HANDRAILS SHALL HAVE A CIRCULAR CROSS SECTION WITH AN OUTSIDE DIAMETER OF AT LEAST 1-1/2" INCHES AND NOT MORE THAN 2" INCHES. NEW HANDRAILS SHALL BE CONTINUOUSLY GRASPABLE ALONG THE ENTIRE LENGTH. NEW HANDRAIL ENDS SHALL BE RETURNED TO THE WALL OR FLOOR OR TERMINATE AT NEWEL POSTS. HANDRAILS SHALL BE PROVIDED ON AT LEAST ONE SIDE OF THE STAIRS. SPIRAL STAIRS AND WINDERS SHALL HAVE THE REQUIRED HANDRAILS LOCATED ON THE OUTSIDE RADIUS. THE HANDGRIP PORTION OF HANDRAILS SHALL HAVE A SMOOTH SURFACE WITH NO SHARP CORNERS. HANDRAILS SHALL BE REQUIRED ON STAIRS WITH AN ELEVATION DIFFERENCE GREATER THAN 21" INCHES.
51. TREADS SHALL BE OF UNIFORM DEPTH AND RISER OF UNIFORM HEIGHT IN ANY STAIRWAY BETWEEN TWO FLOORS. THERE SHALL BE NO VARIATION EXCEEDING 3/16" INCH IN THE DEPTH OF ADJACENT TREADS OR IN THE HEIGHT OF ADJACENT RISERS AND TOLERANCE BETWEEN THE LARGEST AND SMALLEST RISER OR BETWEEN THE LARGEST AND SMALLEST TREAD SHALL NOT EXCEED 3/8" INCHES IN ANY FLIGHT. TREAD DEPTH SHALL BE MEASURED HORIZONTALLY BETWEEN THE VERTICAL PLANES OF THE FOREMOST PROJECTION OF ADJACENT TREADS AND AT A RIGHT ANGLE TO THE TREAD'S LEADING EDGE.
52. ALL WINDOWS ON FRONT FACADE SHALL BE WOOD UNLESS OTHERWISE NOTED IN THE WINDOW SCHEDULE.
53. ALL WINDOW UNIT SIZES ARE GIVEN IN ACTUAL FRAME SIZE. CONTRACTOR TO VERIFY ROUGH-OPENING AND INSTALLATION REQUIREMENTS WITH MANUFACTURER.
54. ALL NEW GLASS OPENINGS SHALL BE PROTECTED AGAINST WINDBORNE DEBRIS WITH ONE OF THE FOLLOWING OPTIONS: A. WOOD STRUCTURAL PANELS WITH A MINIMUM THICKNESS OF 7/16 INCH AND A MAXIMUM SPAN OF 8 FEET. PANELS SHALL BE PRECUT TO COVER THE GLAZED OPENINGS WITH ATTACHMENT HARDWARE PROVIDED. ATTACHMENTS SHALL BE PROVIDED IN ACCORDANCE WITH THE FOLLOWING: (1) SPAN LESS THAN OR EQUAL TO 6 FEET: 2 1/2" #8 WOOD SCREWS @ 16" O.C. (2) FASTENERS SHALL BE INSTALLED AT OPPOSING ENDS OF THE WOOD STRUCTURAL PANEL. (3) WHERE SCREWS ARE ATTACHED TO MASONRY OR MASONRY/STUCCO, THEY SHALL BE ATTACHED UTILIZING VIBRATION-RESISTANT ANCHORS HAVING A MINIMUM ULTIMATE WITHDRAWAL CAPACITY OF 490 LBS. B. IMPACT RESISTANT GLASS PER ASTM E 1986 OR ASTM E 1996 OR APPROVED TEST METHODS FOR PERFORMANCE CRITERIA. C. SHUTTERS CERTIFIED PER THE FOLLOWING TESTS: UNIFORM STATIC AIR PRESSURE – TAS 202, ASTM E330, LARGE MISSILE IMPACTS – TAS 201, ASTM E1996, CYCLIC WIND PRESSURE LOADING – TAS 203, ASTM E1886.
55. NEW WINDOWS INSTALLED IN STAIR LANDING AREAS WITHIN FIVE FEET OF THE LANDING FLOOR SHALL BE SAFETY GLAZED PER R308.4 OF THE IRC 2021.
56. NEW WINDOWS INSTALLED IN BATHROOM ENCLOSURES THAT MEASURE LESS THAN 60" FROM THE FLOOR SHALL BE SAFETY GLAZED IN ACCORDANCE WITH SECTION R308.4 OF THE IRC 2021.
57. THE CONTRACTOR SHALL GRADE THE SITE AS REQUIRED TO ENSURE PROPER RAIN WATER DRAINAGE AND RUNOFF. NO PART OF THE SITE SHALL BE ALLOWED TO DRAIN ONTO ADJACENT PROPERTIES, NOR SHALL RUNOFF BE ALLOWED TO ACCUMULATE NEXT TO THE EXISTING OR PROPOSED STRUCTURE.
58. ALL DOWNSPOUTS TO TERMINATE AT SUB-SURFACE DRAINAGE, PAVING OR SPLASH BLOCKS AS REQUIRED.
59. SITE FLATWORK (WALKS, DRIVES, ETC.,) TO BE 3,000 P.S.I. CONCRETE, 4" TO 6" THICK, WITH 6/6 WELDED WIRE MESH OR AS PER ENGINEER'S DRAWINGS / SPECIFICATIONS.
60. THE ARCHITECT AND ARCHITECTS CONSULTANTS SHALL HAVE NO RESPONSIBILITY OR LIABILITY REGARDING THE IDENTIFICATION, DISCOVERY, PRESENCE, HANDLING, REMOVAL OR DISPOSAL OF, OR EXPOSURE OF PERSONS TO HAZARDOUS MATERIALS IN ANY FORM AT THE PROJECT SITE.
61. WHERE FLOOR / CEILING ASSEMBLIES OR COMMON WALL ASSEMBLIES ARE REQUIRED TO HAVE A FIRE RESISTANT RATING, ELECTRICAL FIXTURES, DUCTWORK, AND PLUMBING SHALL BE INSTALLED SUCH THAT THE REQUIRED FIRE RESISTANT RATING IS NOT REDUCED.
62. ALL BATHROOMS TO BE MECHANICALLY VENTED USING AN EXHAUST FANS REQUIRED BY THE IRC 2021.
63. ALL EXTERIOR DOORS SHALL BE SOLID WOOD DOORS, UNLESS OTHERWISE NOTED IN THE DOOR SCHEDULE.
64. PROVIDE GALVANIC PROTECTION BETWEEN DIS-SIMILAR METALS.

SMOKE AND CARBON MONOXIDE DETECTION

1. DWELLING UNITS SHALL BE EQUIPPED WITH SMOKE DETECTING DEVICES RECEIVING THEIR PRIMARY POWER FROM THE BUILDING WIRING AND THERE SHALL BE NO SWITCHES IN THE CIRCUIT OTHER THAN THE OVER CURRENT DEVICE PROTECTING THE BRANCH CIRCUIT; PROVIDED, HOWEVER THAT DWELLING UNITS IN EXISTING BUILDINGS MAY, IN THE ALTERNATIVE, BE EQUIPPED WITH BATTERY-OPERATED SMOKE DETECTING DEVICES EXCEPT WHERE SUCH BUILDINGS ARE SUBSTANTIALLY IMPROVED OR ALTERED ON OR AFTER JANUARY 1, 1982.
2. BATTERY OPERATED SMOKE DETECTORS SHALL BE CONSIDERED CAPABLE OF BEING CONVERTED TO AUDIBLE AND VISUAL INDICATION.
3. ALL SMOKE DETECTING DEVICES SHALL BE ACCEPTED PURSUANT TO RULES AND REGULATIONS PROMULGATED BY THE COMMISSIONER, APPROVED BY THE BOARD OF STANDARDS AND APPEALS OR LISTED BY A NATIONALLY RECOGNIZED INDEPENDENT LABORATORY. NO DEVICE SHALL BE DEEMED TO BE IN COMPLIANCE WITH THIS PROVISION UNLESS IT IS OF EITHER THE IONIZATION OR PHOTO-ELECTRIC TYPE.
4. SMOKE ALARMS OR DETECTORS SHALL BE LOCATED WITHIN DWELLING UNITS AS FOLLOWS:
    A. ON THE CEILING OR WALL OUTSIDE OF EACH ROOM USED FOR SLEEPING PURPOSES WITHIN 15 FEET (4572 MM) FROM THE DOOR TO SUCH ROOM.
    B. IN EACH ROOM USED FOR SLEEPING PURPOSES.
    C. IN EACH STORY WITHIN A DWELLING UNIT, INCLUDING BELOW-GRADE STORIES AND PENTHOUSES OF ANY AREA, BUT NOT INCLUDING CRAWL SPACES AND UNINHABITABLE ATTICS. IN DWELLINGS OR DWELLING UNITS WITH SPLIT LEVELS AND WITHOUT AN INTERVENING DOOR BETWEEN THE ADJACENT LEVELS, A SMOKE ALARM INSTALLED ON THE UPPER LEVEL SHALL SUFFICE FOR THE ADJACENT LOWER LEVEL PROVIDED THAT THE LOWER LEVEL IS LESS THAN ONE FULL STORY BELOW THE UPPER LEVEL.
5. CARBON MONOXIDE DETECTION DEVICES SHALL RECEIVE THEIR PRIMARY POWER FROM BUILDING WIRING. THERE SHALL BE NO SWITCHES IN THE CIRCUIT OTHER THAN THE OVERCURRENT DEVICE PROTECTING THE BRANCH CIRCUIT.
6. CARBON MONOXIDE ALARMS OR DETECTORS SHALL BE LOCATED WITHIN DWELLING UNITS AS FOLLOWS:
    A. OUTSIDE OF ANY ROOM USED FOR SLEEPING PURPOSES, WITHIN 15 FEET (4572 MM) OF THE ENTRANCE TO SUCH ROOM.
    B. IN ANY ROOM USED FOR SLEEPING PURPOSES.
    C. ON ANY STORY WITHIN A DWELLING UNIT, INCLUDING BELOW-GRADE STORIES AND PENTHOUSES OF ANY AREA, BUT NOT INCLUDING CRAWL SPACES AND UNINHABITABLE ATTICS.
7. ALL CARBON MONOXIDE DETECTION DEVICES SHALL BE ACCEPTED PURSUANT TO RULES AND REGULATIONS PROMULGATED BY THE COMMISSIONER, APPROVED BY THE BOARD OF STANDARDS AND APPEALS OR LISTED BY A NATIONALLY RECOGNIZED INDEPENDENT LABORATORY. NO DEVICE SHALL BE DEEMED TO BE IN COMPLIANCE WITH THIS PROVISION UNLESS IT IS OF EITHER THE IONIZATION OR PHOTO-ELECTRIC TYPE.

LIME RICH MORTAR RECIPE

STUCCO USED OVER OLD BRICKS SHOULD BE OF A SOFTNESS COMPATIBLE WITH THE OLD BRICK. WHERE SCORING IS EMPLOYED, JOINTS SHALL NOT BE DEEPER THAN 1/8", NOR WIDER THAN 1/8" AND PATTERNS SHOULD MATCH ORIGINAL.

LIME: HYDRATED MASONS LIME ASTM C207
AGGREGATE: SHALL CONSIST OF FINE GRANULAR MATERIAL COMPOSED OF NATURAL SAND FREE OF LOAM, SILT, SOLUBLE SALTS AND VEGETABLE MATTER. AGGREGATE SHALL CONFORM TO THE FOLLOWING SIZE GRADATION. WATER: SHALL BE CLEAN AND FREE OF ACIDS, ALKALINE OR ORGANIC MATERIALS.

SLEEVE SIZE	MINIMUM	MAXIMUM
NO. 16	0	10
NO. 30	10	40
NO. 50	30	65
NO. 100	60	95

PROPORTIONS
- 1 PART BY VOLUME HYDRATED LIME
- 3 PARTS BY VOLUME AGGREGATE
- WATER-ENOUGH TO FORM A WORKABLE MIX

EXECUTION
- REMOVE ALL PORTLAND CEMENT MORTAR BY HAND USING A CHISEL AND MALLET. DO NOT USE POWER TOOLS. RAKE JOINTS TO A DEPTH OF AT LEAST 1" OR TO SOUND MORTAR.
- BRUSH, VACUUM OR FLUSH JOINTS TO REMOVE ALL DIRT AND LOOSE DEBRIS.
- MEASURE AND PROPORTION ALL MATERIALS TO INSURE UNIFORMITY OF BATCHES.
- USE AND PLACE MORTAR IN FINAL POSITION WITHIN 2 1/2 HOURS OF MIXING. DO NOT RETEMPER OR USE MATERIAL THAT HAS PARTIALLY SET, IS CRACKED OR IS LUMPY.
- USE ONLY CLEAN TOOLS AND EQUIPMENT, FREE FROM HARDENED OR PARTIALLY HARDENED MATERIALS.
- MACHINE MIX THE MORTAR FOR AT LEAST THREE MINUTES.
- DAMPEN BRICKS (SURFACE DRY) PRIOR TO REPOINTING.
- PACK JOINTS WITH NEW MORTAR LEAVING NO VOIDS.
- RECESS THE SURFACE OF THE POINTING SLIGHTLY. DO NOT ALLOW THE MORTAR TO EXTEND OVER THE EDGES OF THE BRICK.
- AS SOON AS THE MORTAR HAS TAKEN ITS INITIAL SET, TOOL THE JOINT TO MATCH THE ORIGINAL JOINT CONFIGURATION. STIPPLE WITH A STIFF BRUSH TO GIVE THE JOINT A WEATHERED APPEARANCE AND TO REMOVE ANY EXCESS OR RAGGEDNESS AND LEAVE THE WORK CLEAN. SHOULD BE ASSISTED BY SPRAYING FROM A FINE MIST HAND SPRAY.
- KEEP POINTING (90% HUMIDITY) FOR 48 TO 72 HOURS.

LIME RICH MORTAR RECIPE (CONTINUED)

VARIATIONS
IN SOME CASES IT MAY BE DESIRABLE AND/OR NECESSARY TO MATCH THE COLOR AND TEXTURE OF THE ORIGINAL MORTAR EXACTLY. IN SUCH CASES THE AGGREGATE SHOULD BE MATCHED TO THE ORIGINAL CONTENT, COLOR AND GRADATION. THE ABOVE RECOMMENDED PROPORTION OF SAND TO LIME MAY NEED ALSO TO BE ALTERED. PORTLAND CEMENT IS SOMETIMES ADDED TO THE MIX TO INCREASE WORKABILITY AND DECREASE SETTING TIME BUT UNDER NO CIRCUMSTANCES SHOULD THE PORTLAND CEMENT CONTENT EXCEED ONE PART TO TWELVE PARTS OF LIME AND SAND. PORTLAND CEMENT IN GENERAL, HOWEVER, IS NOT RECOMMENDED FOR USE IN POINTING MORTAR.

CARE OF STUCCO
- IDENTIFICATION OF DETERIORATION
  1. CRACKING - CRACKING OCCURS IN TWO WAYS. LARGE CRACKS AND SMALL ALL OVER CRACKS.
  2. SPALLING - THE OUTER SURFACE OF THE STUCCO COATING BECOMES DETACHED AND FALLS OFF.
  3. LOSS OF BOND - THE STUCCO COATING IS NO LONGER ATTACHED TO THE BRICK MASONRY.

CAUSES OF DETERIORATION
- LARGE CRACKS ARE MOST OFTEN CAUSED BY SETTLEMENT OF THE WALLS OR BY DIFFERENCES IN THE MOVEMENT OF THE STUCCO AND THE BACKING MASONRY DUE TO EXPANSION AND CONTRACTION.
- HAIRLINE CRACKING IS CAUSED BY THE IMPROPER CURING OF THE STUCCO WHEN IT WAS APPLIED. THE STUCCO WAS ALLOWED TO DRY TOO QUICKLY AND AS IT DRIED IT CONTRACTED.
- LOSS OF BOND IN MOST CASES OCCURS AFTER THE STUCCO HAS CRACKED AND WATER HAS ENTERED THE WALL THROUGH THE CRACKS IN THE STUCCO COATING. BONDING FAILURE MAY ALSO BE CAUSED BY THE IMPROPER PREPARATION OF THE MASONRY SURFACE BEFORE THE STUCCO WAS APPLIED.

CODE REVIEW

SINGLE FAMILY RESIDENCE - CODE REVIEW DONE USING 2021 - IRC.

KEYNOTES - PROJECT

Key Value	Keynote Text
D-01	HATCH INDICATES AREA OF DEMO, TYP.; PROVIDE SHORING WHERE REQ.
D-02	RETAIN EXIST. FIREPLACE; PROVIDE PROTECTION THROUGHOUT CONSTRUCTION.
D-03	RETAIN EXIST. PICTURE RAIL THIS ROOM; PROVIDE PROTECTION THROUGHOUT CONSTRUCTION. PATCH AS REQ.
D-04	GC TO EXAMINE & REPAIR EXTENTS OF TERMITE DAMAGE SHOW IN PHOTOS 2/D101 AT THIS LOCATION.
D-05	REMOVE FLAT WORK AT THIS LOCATION; TYP. PER HATCH.
D-06	REMOVE SHED ROOF OVER FLAT WORK. PATCH SHED AS REQ.
D-07	WATERLINE TO SHED AT HANDRAIL, CAUTION DURING DEMO.
D-09	REMOVE EXIST. WALL AT THIS LOCATION. SHORE AS REQ.
D-10	REMOVE EXIST. WALL AREA FOR NEW WINDOW/DOOR, TYP. PER HATCH; RE. PROP. ARCH.
D-11	REMOVE EXIST. WINDOW AT THIS LOCATION; TYP. PER HATCH.
D-12	REMOVE DOUBLE WINDOW AT THIS LOCATION & REHANG 1'-0" TOWARDS FRONT ELEVATION.
D-13	REMOVE & SALVAGE EXIST. DOUBLE WINDOW FOR REUSE. RE. A101 FOR NEW LOCATION; TYP. PER TAG.
D-14	REMOVE & SALVAGE EXIST. WINDOW AT THIS LOCATION FOR REUSE. RE. A101 FOR NEW LOCATION; TYP. PER TAG.
D-15	REMOVE EXIST. DOOR AT THIS LOCATION; TYP. PER HATCH.
D-16	REMOVE & SALVAGE CRAFTSMAN DOOR PANEL FOR REUSE. RE. A101 FOR NEW LOCATION; TYP. PER TAG.
D-17	REMOVE EXIST. FLOOR TILE AT THIS ROOM.
D-18	REMOVE EXIST. BEADBOARD CLG. AT THIS ROOM.
D-19	REMOVE EXIST. COUNTERTOP AT THIS LOCATION.
D-20	REMOVE EXIST. PLUMBING FIXTURES AT THIS LOCATION.
D-21	REMOVE & SALVAGE CLAW FOOT TUB AT THIS LOCATION FOR REUSE IN ROOM #006.
D-22	REMOVE & SALVAGE PLUMBING FIXTURE AT THIS LOCATION. SAVE FOR REVIEW BY OWNER.
D-23	REMOVE & SALVAGE CABINET MILLWORK AT THIS LOCATION FOR REUSE. RE. A101 FOR NEW LOCATION.
D-23.01	REMOVE & SALVAGE HAMPER MILLWORK AT THIS LOCATION FOR REUSE. RE. A101 FOR NEW LOCATION.
D-24	REMOVE & SALVAGE HISTORIC MILLWORK AT THIS LOCATION. SAVE FOR REVIEW BY OWNER.
D-25	REMOVE EXIST. ROOF FINISH, ROOF FRAMING, GUTTERS, & D.S. AS REQ.; RE. PROPOSED PLANS.
D-26	REMOVE EXIST. ROOF FINISH, GUTTERS, & D.S.; EXIST. STRUCTURE TO REMAIN.
D-27	REMOVE EXIST. SIDING & TRIM, TYP. PER HATCH.
D-28	DEMOLISH FLOOR & FRAMING FOR NEW SIDE ENTRY PER HATCH.
D-29	REMOVE EXIST. STAIR AT THIS LOCATION.
D-30	REMOVE EXIST. DUCTWORK ON FROM 1309 ADAMS ST NEIGHBOR THAT EXTENDS OVER PROPERTY LINE. COORD. W/ OWNER & NEIGHBOR PRIOR TO REMOVAL.
D-31	EXIST. SIDING & TRIM TO REMAIN; FRONT ELEVATION ONLY. PATCH & REPAIR SIDING & TRIM AS REQ.
ID-01	NEW WOOD THRESHOLD TO MATCH WOOD FLOORING, TYP. BETWEEN INTERIOR FLOOR MATERIAL TRANSITIONS
ID-02	NEW STONE COUNTERTOP AT THIS LOCATION; GC TO COORD. SELECTIONS W/ OWNER & VENDOR AS REQ.
ID-03	NEW GRANITE COUNTERTOP AT THIS LOCATION; GC TO COORD. SELECTIONS W/ OWNER & VENDOR AS REQ.
ID-04	NEW MILLWORK; GC TO COORD. SELECTIONS W/ OWNER & VENDOR AS REQ.
ID-05	NEW FRAMED HOOD COVER AT THIS LOCATION; G

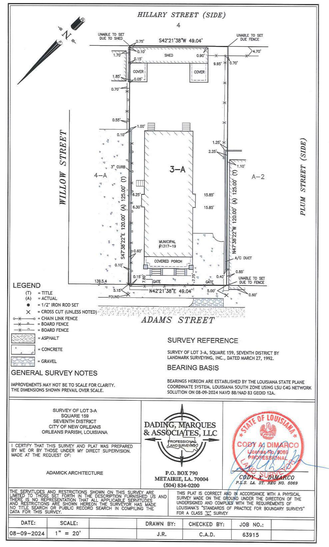

1 1317-1318 ADAMS ST. SURVEY
NOT TO SCALE

DEPARTMENT OF SAFETY & PERMITS
CITY OF NEW ORLEANS

PERMIT NO: _____ DATE: _____

ADDRESS: 1317-19 ADAMS ST SUBDIVISION: _____
DISTRICT: SEVENTH SQUARE: 159 LOT: 3-A

COMMUNITY NUMBER	PANEL NUMBER	SUFFIX	DATE OF FIRM INDEX	FIRM ZONE	BASE FLOOD ELEVATION (BFE)	FREEBOARD (FREEBOARD = BFE + 2 FEET) (BFE +2FEET)
225 203	2207C 0209	F	9/30/2016	X	N/A	=11.5 =

MINIMUM FLOOR ELEVATION: _____ N.A.V.D.
FOR V - ZONES ONLY: _____ N.A.V.D.
(ELEVATION OF BOTTOM OF LOWEST HORIZONTAL STRUCTURAL MEMBER)
APPROVED FOR CITY BY: _____

IN ADDITION TO THE FIRM ELEVATIONS, THE FOLLOWING CONDITIONS MUST ALSO BE MET:
A. TOP OF SLABS ON GRADE OR FILL MUST BE AT LEAST 36" ABOVE THE HIGHEST POINT OF CURB IN FRONT OF THE LOT OR SITE.
B. ALL ELECTRICAL EQUIPMENT (INCLUDING PANELS) MUST HAVE AT LEAST 10' CLEARANCE BENEATH THE STRUCTURE. IN ADDITION, THE LOWEST FLOOR MUST BE AT LEAST 36" ABOVE THE HIGHEST POINT OF CURB IN FRONT OF THE LOT OR SITE. (IF NO CURB, USE CENTERLINE OF STREET)
C. ALL MECHANICAL EQUIPMENT (INCLUDING SERVICING THE BUILDING) MUST BE LOCATED AT OR ABOVE THE REQUIRED FLOOR ELEVATION.
D. SLABS FOR ATTACHED GARAGES MUST BE AT THE REQUIRED FLOOR ELEVATION OR BE CONSTRUCTED OF WATER-RESISTANT MATERIALS BELOW THE REQUIRED FLOOR.
E. DETACHED GARAGES WITH PLUMBING MUST BE AT THE REQUIRED FLOOR ELEVATION.
F. CONSTRUCTION BENCHMARK MUST BE SET AT REQUIRED MINIMUM FLOOR ELEVATION OR GREATER. (ADD 1 FOOT FOR A & V-ZONES)

1. CERTIFICATE OF CONSTRUCTION BENCHMARK
EXISTING HIGHEST TOP OF CURB ELEVATION N/A N.A.V.D.
EXISTING LOWEST TOP OF CURB ELEVATION N/A N.A.V.D.
EXISTING LOT ELEVATIONS (PROPERTY CORNERS OR BCGS)
FRONT (RIGHT) 2.65 N.A.V.D. FRONT (LEFT) 2.82 N.A.V.D.
REAR (RIGHT) 3.16 N.A.V.D. REAR (LEFT) 3.11 N.A.V.D.
OTHER: OTHER: 2.34 N.A.V.D.
DESCRIBE EXISTING FINISHED FLOOR AT FRONT DOOR DESCRIBE EXISTING LOWEST CONTIGUOUS FLOOR
DESCRIPTION OF CONSTRUCTION BENCHMARK: IRAD SPIKE SET IN LOT FACE OF POWER POLE LOCATED FRONT STREET PROP. LOT
LOCATION OF CONSTRUCTION BENCHMARK: 6.65 N.A.V.D. (SEE NOTE F.)
REFERENCE BENCHMARK USED TO ESTABLISH CONSTRUCTION BENCHMARK: GPS/13ASB08D
ELEVATION OF REFERENCE BENCHMARK: _____ N.A.V.D.
SIGNATURE: _____ DATE: 09/13/2024
(L.A. REGISTERED PROFESSIONAL LAND SURVEYOR OR CIVIL ENGINEER) (SEAL)

2. CERTIFICATE OF TOP OF FORM ON TOP OF PIER ELEVATION
(To be submitted before pouring concrete for slab construction or framing floor for pier construction)
AS BUILT ELEVATIONS: FORMS _____ N.A.V.D. PIER _____ N.A.V.D.
PIER CONSTRUCTION:
ALL FRAMING MATERIALS BELOW THE MINIMUM FLOOR ELEVATION (B.F.E.) MUST BE CONSTRUCTED WITH WATER-RESISTANT MATERIALS AND THE FIRST FLOOR MUST BE AT OR ABOVE THE MINIMUM FLOOR ELEVATION (B.F.E.).
V ZONES ONLY:
BOTTOM OF LOWEST HORIZONTAL STRUCTURAL MEMBER _____ N.A.V.D.
(Must be submitted before framing begins)
IN V ZONES, ALL ENCLOSURES BELOW THE B.F.E. MUST BE DESIGNED WITH BREAK-AWAY WALLS CONSTRUCTION.
SIGNATURE: _____ DATE:
(L.A. REGISTERED PROFESSIONAL LAND SURVEYOR OR CIVIL ENGINEER) (SEAL)

3. FILLING, GRADING, DRAINAGE, SIDEWALK AND DRIVEWAY CERTIFICATION AND AFFIDAVIT
(To be submitted before Use & Occupancy Certificate can be issued)
THIS WILL CONFIRM THAT ALL FILLING, GRADING, DRAINAGE, SIDEWALKS AND DRIVEWAYS HAVE MET THE REQUIREMENTS OF THE APPLICABLE SECTIONS OF THE CODE OF THE CITY OF NEW ORLEANS.
OWNER: _____ DATE: _____
APPLICANT: _____ DATE: _____
OR (NOT/ANY)
IS LOT PROPERLY FILLED TO GRADE? ____YES ____NO
(minimum 1ot slope, rear 1ot line 1ower by every 25 feet)
ARE SIDEWALKS PROPERLY INSTALLED? ____YES ____NO
ARE DRIVEWAYS PROPERLY INSTALLED? ____YES ____NO
ARE RETAINING WALLS REQUIRED? ____YES ____NO
(if yes, then on which side(s) RIGHT ____ LEFT ____ REAR
AT MINIMUM FLOOR ELEVATION? ____YES ____NO
DO ATTACHED GARAGES IN A ZONES, ____YES ____NO
THAT ARE BELOW MINIMUM FLOOR ELEVATION,
HAVE PROPER VENTING AND WATERPROOFING? ____YES ____NO ____N/A
SIGNATURE: _____ DATE: _____
(L.A. REGISTERED PROFESSIONAL CIVIL ENGINEER) (SEAL)
THE LATEST FIRM ELEVATION CERTIFICATE MUST ACCOMPANY PART 3 OF THIS FORM WHEN SUBMITTED TO THE DEPARTMENT OF SAFETY AND PERMITS. 2016

STATE OF LOUISIANA
CORY J. DIMARCO
PROFESSIONAL LAND SURVEYOR

2 1317-1319 ADAMS ST. ELEVATION CERTIFICATE
NOT TO SCALE

PERMEABLE OPEN SPACE

LEGEND

- LANDSCAPING - PERMEABLE
- PLANTER - PERMEABLE
- GRAVEL - PERMEABLE
- TRUEGRID DRIVEWAY - PERMEABLE

CALCULATION

1,766 SQ.FT. PERMEABLE / 5,885 SQ.FT. LOT
= .30 = 30% PERMEABLE OPEN SPACE

SITE PLAN : PROPERTY INFORMATION

ADDRESS :	1317-1319 ADAMS ST.
CITY / PARISH :	NEW ORLEANS / ORLEANS
ZIP CODE :	70118
SQUARE / BLOCK :	159
LOT :	3-A/019
ZONING DISTRICT:	HU-RD2
USE :	TWO-FAMILY DWELLING
HISTORIC DISTRICT:	HDLC - UPTOWN NEIGHBORHOOD

SITE PLAN : ZONING DATA

	REQUIRED	EXIST / PROP.
LOT AREA (SQ.FT.) :	1,800 SQ.FT. DU	5,885 SQ.FT.*
LOT WIDTH :	30'-0"	49'-0 1/2"
LOT DEPTH :	90'-0"	120'-0"
BLDG. HEIGHT :	35'-0"	26' - 4 3/8"
PERM. OPEN SPACE:	30%	30%
MIN. OPEN SPACE :	120 SQ.FT. DU	873 SQ.FT. DU
MAX. IMPERV. FRONT YARD:	40% LOT SQ.	N.V.
FRONT SETBACK :	11.3.A.2	7'-9"*
SIDE SETBACK :	3'-0"	+/- 4' - 6 1/4" (W) +/- 6' - 8 3/4" (E)*
REAR SETBACK :	20% OF LOT DEPTH OR 15'-0"	15'-0"

* = EXISTING TO REMAIN

GENERAL SITE PLAN NOTES

1. ALL DIMENSIONS ARE "FINISH TO FINISH," UNLESS NOTED OTHERWISE.
2. CONTRACTOR RESPONSIBLE FOR LOCATING AND COORDINATING ALL NEW FOUNDATIONS, PILES, GRADE BEAMS ETC. WITH SURVEYOR PRIOR TO PROCEEDING WITH CONSTRUCTION OF THE BUILDING.
3. CONTRACTOR IS RESPONSIBLE FOR PROVIDING NEW GRADING, SOD, HARDSCAPING, AND GRAVEL WITH A WEED BARRIER AS INDICATED ON THE SITE PLAN.
4. ALL NEW A/C CONDENSERS REQUIRED TO BE 3'-0" ABOVE GRADE, 3'-0" AWAY FROM ALL SIDEYARD LOT LINES, 5'-0" FROM REAR LOT LINE, AND 6'-0" FROM ALL ROOF EDGES. HVAC INSTALLER TO SIZE MACHINE ACCORDINGLY AND PROVIDE ADEQUATE SERVICE AND CLEARANCE SPACE AROUND THE MACHINE.

SHEET - KEYNOTES

Key Value	Keynote Text
N-01	DASHED LINE INDICATES EXT. WALL BELOW, TYP.
N-02	PORTION OF EXIST. SHED TO REMAIN; PROVIDE PROTECTION DURING CONSTRUCTION.
N-03	EXIST. 6'-0" WOODEN FENCE TO REMAIN; PROVIDE PROTECTION DURING CONSTRUCTION.
N-04	EXIST. FLAT WORK / WALKWAY TO REMAIN; CLEAN AND REPAIR AS REQ.
N-05	EXIST. CURB CUT & DRIVEWAY TO REMAIN; CLEAN AND REPAIR AS REQ.
N-06	EXIST. LANDSCAPING / FOLIAGE TO REMAIN AT THIS LOCATION; PROVIDE PROTECTION DURING CONSTRUCTION.
N-07	HATCH INDICATES NEW CRUSHED GRAVEL WITH WEED BARRIER BELOW, TYP.; TO BE PROVIDED BY GC; GC TO PROVIDE FINISH GRADE.
N-08	HATCH INDICATES NEW SOD, TYP.; TO BE PROVIDED BY GC; GC TO PROVIDE FINISH GRADE.
N-09	HATCH INDICATES NE) TRUE GRID GRAVEL PAVING, TYP.
N-10	HATCH INDICATES NEW 2X2 CONC. PAVER.
N-10.01	HATCH INDICATES NEW CONC. WALKWAY.
N-11	NEW 7'-0" TALL VERT. PTL WOOD FENCE; COORD. HARDWARE W/ OWNER. RE. DTL 1/A502
N-12	NEW 7'-0" TALL VERT. PTL WOOD SWING GATE; COORD. HARDWARE W/ OWNER. RE. DTL 1/A502
N-13	NEW 7'-0" TALL VERT. PTL WOOD DOUBLE SWING GATE; COORD. HARDWARE W/ OWNER. RE. DTL 2/A502
N-14	NEW ALUMINUM BAKED 5 1/2" K-STYLE GUTTERS CONNECTED TO 3 1/2" REC. D.S. BELOW, TYP.
N-15	NEW VENTED FORTIFIED ARCHITECTURAL SHINGLE ROOF W/ ICE & WATER BARRIER UNDERLAYMENT ATOP NEW SHEATHING; EXIST. FRAMING TO REMAIN. GC. TO COORD. CERTIFICATION & INCLUDE FEE.
N-16	NEW VENTED FORTIFIED ARCHITECTURAL SHINGLE ROOF W/ ICE & WATER BARRIER UNDERLAYMENT ATOP NEW SHEATHING; RE. STRUC. FOR SHEATHING & FRAMING SIZE. GC. TO COORD. CERTIFICATION & INCLUDE FEE.
N-16.01	NEW INSULATED FORTIFIED ARCHITECTURAL SHINGLE ROOF W/ ICE & WATER BARRIER UNDERLAYMENT ATOP NEW SHEATHING; RE. STRUC. FOR SHEATHING & FRAMING SIZE. GC. TO COORD. CERTIFICATION & INCLUDE FEE.
N-17	SYMBOL INDICATES NEW THERMOSTATIC ROOF VENT.
N-18	NEW EXPOSED RAFTER W/ BEADED PLY. FOR BDB APPEARANCE AT UNDERSIDE OF EAVE, VENT BETWEEN RAFTERS AT TOP OF WALL, TYP.
N-19	NEW EXPOSED RAFTER BEADED PLY. FOR BDB APPEARANCE AT UNDERSIDE OF EAVE, TYP. NO VENTS.
N-72.01	NEW 16 SEER A/C CONDENSER ON PTL PLATFORM 3'-0" A.F.G. PROVIDE REQ. CLEARANCES I.A.W. CODE.
N-76	GENERAC GENERATOR AT THIS LOCATION TO POWER 1319 SIDE.

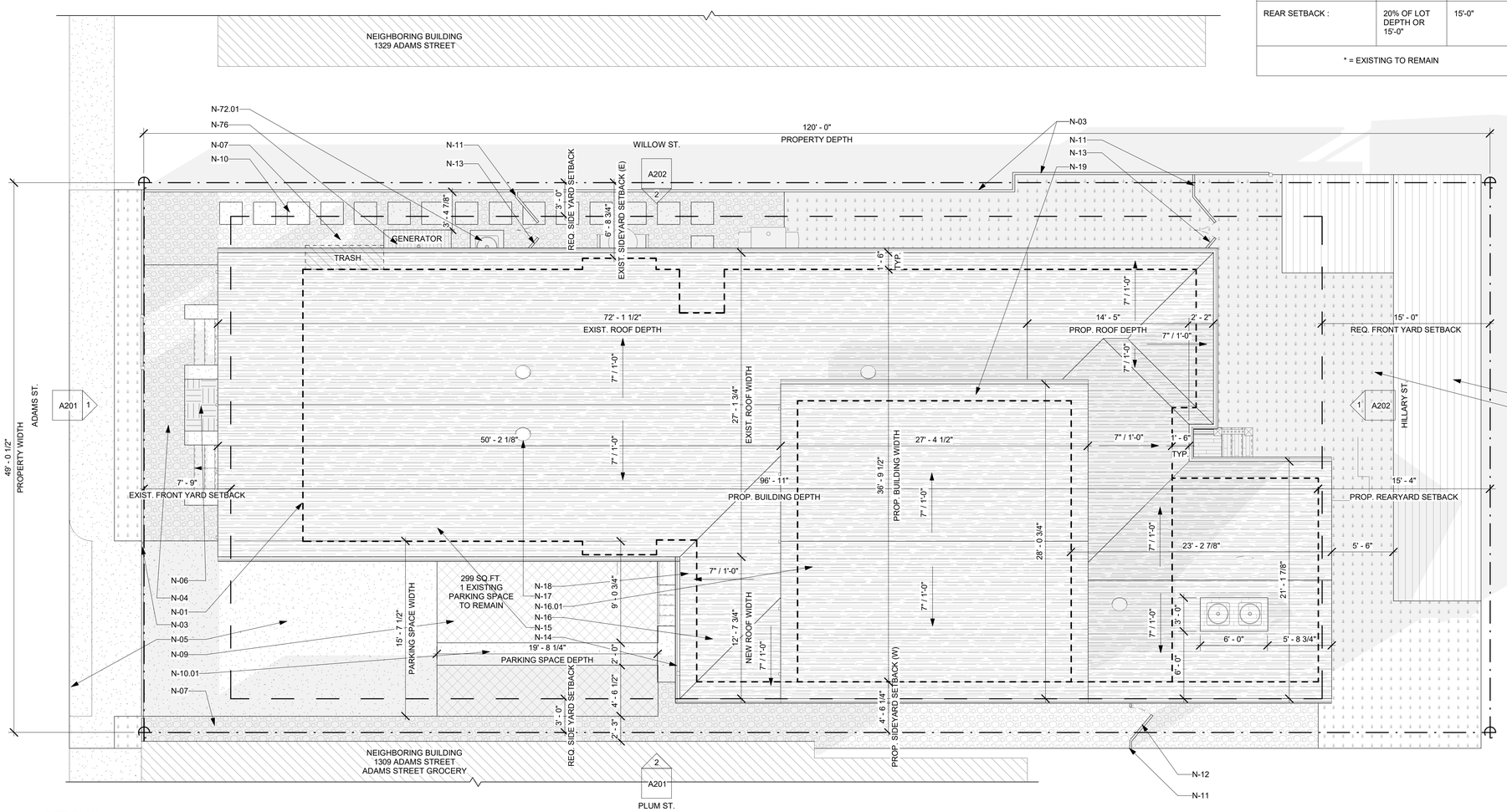

3 SITE PLAN
3/16" = 1'-0"

ADAMICK ARCHITECTURE
3301 CHIPPEWA STREET
NEW ORLEANS, LA 70115
504.322.1220

No.	Description	Date

20 DEC. 2024	CD-100%
16 DEC. 2024	CD-85%
18 NOV. 2024	CD-75%
28 OCT. 2024	DD-3
18 SEP. 2024	DD-2
06 SEP. 2024	DD-1
20 AUG. 2024	SD-3
30 JUL. 2024	SD-2
11 JUL. 2024	SD-1
20 JUN. 2024	EC-1

Project: #2024-19

COOK RESIDENCE RENOVATION & ADDITION

ADDRESS:
1317-1319 ADAMS ST. NEW ORLEANS, LA 70118

SITE PLAN, ZONING, SURVEY, & ELEV. CERT.

ALEXANDER JAMES ADAMICK
REG. NO. 8148
STATE OF LOUISIANA
REGISTERED ARCHITECT

DATE:	2/12/2025 2:57:59 PM
PROJECT NO.:	2024-19
DRAWING BY:	ICF
CHECKED BY:	AJA
SHEET NO.:	A100
CAD FILE NO: 2024-19\PDF OUT\EC	3 /39

GENERAL STRUCTURAL NOTES:

1. UNLESS NOTED OTHERWISE ON THE DRAWINGS, THE FABRICATION, TESTING, AND CONSTRUCTION SHALL BE IN STRICT ACCORDANCE WITH THE FOLLOWING NOTES. SHOULD CODES OR STANDARDS CONFLICT WITH THE DRAWINGS AND SPECIFICATIONS, THE MORE STRINGENT REQUIREMENT SHALL GOVERN. REFER TO THE PROJECT SPECIFICATIONS FOR ADDITIONAL INFORMATION AND REQUIREMENTS.
2. FOR THE FOLLOWING REFERENCE CODES AND STANDARDS, ONLY THE LATEST EDITION IS APPLICABLE, UNLESS OTHERWISE INDICATED:
   - (A) AMERICAN CONCRETE INSTITUTE (ACI)
   - (B) AMERICAN INSTITUTE OF STEEL CONSTRUCTION (AISC)
   - (C) AMERICAN IRON AND STEEL INSTITUTE (AISI)
   - (D) AMERICAN STANDARD FOR TESTING AND MATERIALS (ASTM)
   - (E) AMERICAN WELDING SOCIETY (AWS)
   - (F) RESEARCH COUNCIL ON STRUCTURAL CONNECTIONS (RCSC)
   - (G) STEEL STRUCTURES PAINTING COUNCIL (SSPC)
   - (H) OCCUPATIONAL SAFETY AND HEALTH ADMINISTRATION (OSHA)
3. SPECIFIED MATERIALS INCLUDING GROUTS, SEALANTS, ANCHORAGE, MECHANICAL DEVICES, ETC. SHALL BE IN ACCORDANCE WITH MANUFACTURER'S RECOMMENDATIONS AND REQUIREMENTS SET OUT IN THE SPECIFICATIONS.
4. STRUCTURAL DRAWINGS SHALL BE USED AND INTERPRETED IN CONJUNCTION AND COORDINATION WITH ARCHITECTURAL, MECHANICAL, ELECTRICAL, SHOP DRAWINGS, AND SPECIFICATIONS.
5. CONTRACTOR SHALL VERIFY ALL DIMENSIONS AND ELEVATIONS SET OUT IN THE ARCHITECT'S DRAWINGS BEFORE COMMENCING WORK.
6. CONTRACTOR SHALL VERIFY ALL CAMBER, DEPRESSIONS, SLOPES, OPENINGS, PENETRATIONS, ETC. THROUGH OR WITHIN STRUCTURAL ELEMENTS. ANY STRUCTURAL ELEMENTS NOT SHOWN ON THE STRUCTURAL DRAWINGS SHALL BE BROUGHT TO THE ATTENTION OF THE ENGINEER OF RECORD.
7. CONTRACTOR SHALL VERIFY THE LOCATION OF ALL EXISTING UTILITIES BEFORE BEGINNING ANY WORK. ANY INTERFERENCE OR CONFLICT SHALL BE BROUGHT IMMEDIATELY TO THE ATTENTION OF THE ENGINEER OF RECORD.
8. CONTRACTOR SHALL BE RESPONSIBLE FOR ALL FINAL DIMENSIONS AND FIT-UP OF THE STRUCTURE, INCLUDING BUT NOT LIMITED TO, VERIFYING ALL EXISTING CONDITIONS AND DIMENSIONS BEFORE COMMENCING WORK AND ALL AS-BUILT CONDITIONS AS THE WORK PROGRESSES.
9. CONTRACTOR SHALL BE SOLELY RESPONSIBLE FOR THE DESIGN, ERECTION, PLACEMENT, MAINTENANCE, DURATION AND REMOVAL OF ANY SHORING, RE-SHORING, BACK-SHORING, BRACING, TIE-BACKS, OR OTHER TEMPORARY SUPPORT STRUCTURES REQUIRED TO SUPPORT ANY PART OF THE NEW OR EXISTING CONSTRUCTION OR SURROUNDING IMPROVEMENTS DURING THE ENTIRE CONSTRUCTION PROCESS TO ENSURE THE SAFETY AND STABILITY OF THE STRUCTURE.
10. ALL WORK AREAS SHALL BE KEPT NEAT, CLEAN, AND SAFE AT ALL TIMES BY THE CONTRACTOR. TRASH AND DEMOLISHED MATERIALS SHALL NOT BE ALLOWED TO ACCUMULATE AT THE SITE DURING EXECUTION OF WORK. CONTRACTOR SHALL BE RESPONSIBLE FOR REMOVAL OF ALL DEBRIS. ALL DEBRIS SHALL BE PROPERLY AND LEGALLY DISPOSED OF. ALL ASPECTS OF JOB SITE SAFETY ARE COMPLETELY THE RESPONSIBILITY OF THE CONTRACTOR.
11. STEEL FRAMES ARE "NON-SELF SUPPORTING". ADEQUATE TEMPORARY SUPPORT SHALL BE PROVIDED BY THE CONTRACTOR UNTIL REQUIRED CONNECTIONS OR ELEMENTS ARE INSTALLED AND COMPLETED.
12. DETAILS SHOWN ON DRAWINGS ARE TO BE CONSIDERED TYPICAL FOR ALL SIMILAR CONDITIONS.
13. CONTRACTOR SHALL BE SOLELY RESPONSIBLE FOR AND HAVE CONTROL AND CHARGE OF THE MEANS, METHODS, TECHNIQUES, SEQUENCES OR PROCEDURES, AND FOR SAFETY PRECAUTIONS AND PROGRAMS IN CONNECTION WITH THE WORK.

FOUNDATION NOTES:

1. NO SOILS REPORT HAS BEEN PREPARED FOR THIS PROJECT. UNLESS NOTED OTHERWISE, THE GENERAL CONTRACTOR SHALL BE RESPONSIBLE FOR ENSURING ADEQUATE SOIL SUPPORT FOR THE FOUNDATION DESIGN AND SHALL REPORT UNEXPECTED CONDITIONS TO THE ENGINEER OF RECORD.
2. UNLESS SHOWN OTHERWISE, GRADE BEAMS TO BE CENTERED ON COLUMNS AND WALLS.
3. GRADE BEAMS MAY BE EARTH FORMED PROVIDED DIMENSIONAL TOLERANCES LISTED IN THE APPLICABLE ACI CODES ARE ADHERED TO.
4. ALL SLABS, BEAMS, AND FOOTINGS NOT PILE-SUPPORTED SHALL BE SUPPORTED ON EXISTING UNDISTURBED SOIL OR NON-EXPANSIVE TYPE FILL COMPACTED TO 95% OF MAXIMUM STANDARD PROCTOR DENSITY.

   DESIGN SOIL PRESSURE = 1500 LBS. PER SQ. FT.
5. SURFACE DRAINAGE SHALL BE DIVERTED TO A STORM SEWER CONVEYANCE OR OTHER APPROVED POINTS OF COLLECTION THAT DOES NOT CREATE A HAZARD. LOTS SHALL BE GRADED TO DRAIN SURFACE WATER AWAY FROM FOUNDATION. GRADE SHALL FALL A MINIMUM 6 INCHES WITHIN THE FIRST 10 FEET.

CONCRETE NOTES:

1. APPLICABLE CODES OR STANDARDS:

   ALL DESIGN, FABRICATION, TESTING, AND ERECTION SHALL BE IN ACCORDANCE WITH THE FOLLOWING CODES AND STANDARDS:
   - (A) ACI 117 – SPECIFICATION FOR TOLERANCES FOR CONCRETE CONSTRUCTION AND MATERIALS
   - (B) ACI 301 – SPECIFICATIONS FOR STRUCTURAL CONCRETE
   - (C) ACI 304 – RECOMMENDED PRACTICE FOR MEASURING, MIXING, TRANSPORTING, AND PLACING CONCRETE
   - (D) ACI 308 – RECOMMENDED PRACTICE FOR CURING CONCRETE
   - (E) ACI 315 AND 315R – DETAILS AND DETAILING OF CONCRETE REINFORCEMENT
   - (F) ACI 316 – RECOMMENDED PRACTICE FOR CONSTRUCTION OF CONCRETE PAVEMENTS AND CONCRETE BASES
   - (G) ACI 318 – BUILDING CODE REQUIREMENTS FOR STRUCTURAL CONCRETE
   - (H) ACI 336 – SUGGESTED DESIGN AND CONSTRUCTION PROCEDURES FOR PIER FOUNDATIONS
   - (I) ACI 347 – RECOMMENDED PRACTICE FOR CONCRETE FORM WORK
   - (J) ASTM STANDARDS FOR THE MATERIALS LISTED.
2. MATERIALS:

   MATERIALS SHALL MEET THE SPECIFICATIONS LISTED IN THIS SECTION (UNLESS NOTED OTHERWISE):
   - (A) CONCRETE SHALL A MINIMUM COMPRESSIVE STRENGTH OF 4,000 PSI AT 28 DAYS.
   - (B) CONCRETE SHALL BE NORMAL WEIGHT (APPROXIMATELY 150 LBS. PER CUBIC FT.)
   - (C) PORTLAND CEMENT SHALL MEET ASTM C150 TYPE II.
   - (D) AGGREGATE FOR NORMAL WEIGHT CONCRETE SHALL MEET ASTM C33.
   - (E) REINFORCING STEEL SHALL MEET ASTM A615 GRADE 60.
   - (F) WELDED WIRE FABRIC (WWF) SHALL MEET ASTM A185.
   - (G) STEEL PLAIN WIRE SHALL MEET ASTM A82.

CONCRETE NOTES (CONT.):

3. SLUMPS:

   CONCRETE SLUMPS SHALL MEET THE SPECIFICATIONS LISTED IN THIS SECTION (UNLESS NOTED OTHERWISE):
   - (A) CONCRETE WITHOUT WATER-REDUCING ADMIXTURES OR PRIOR TO THEIR ADDITIONS SHALL HAVE A MAXIMUM SLUMP OF 5 INCHES.
   - (B) CONCRETE WITH LOW TO MODERATE RANGE WATER-REDUCING ADMIXTURES SHALL HAVE A MAXIMUM SLUMP OF 6 INCHES.
   - (C) CONCRETE WITH HIGH RANGE WATER-REDUCING ADMIXTURES SHALL HAVE A MAXIMUM SLUMP OF 8 INCHES.
4. EXPOSED EDGE CONDITIONS:
   - (A) EXPOSED EDGES OF CONCRETE ABOVE GRADE SHALL BE CHAMFERED 3/4" AT 45 DEGREES (AS SHOWN ON SECTIONS IF REQUIRED).
5. BONDING:

   BONDING SHALL MEET THE SPECIFICATIONS LISTED IN THIS SECTION (UNLESS NOTED OTHERWISE):
   - (A) CONSTRUCTION JOINTS BETWEEN NEW AND HARDENED CONCRETE SHALL BE CLEAN, FREE OF LAITANCE, AND INTENTIONALLY ROUGHENED TO A FULL AMPLITUDE OF 1/4".
   - (B) FOR INSTALLATION OF DOWELS IN HARDENED CONCRETE, CONTRACTOR SHALL DRILL AND EPOXY WITH HILTI HY-HIT 200 OR APPROVED EQUAL.
   - (C) FOR INSTALLATION OF DOWELS IN BRICK MASONRY, CONTRACTOR SHALL DRILL AND EPOXY WITH HILTI HY-HIT 270 OR APPROVED EQUAL.
6. CONCRETE PROTECTION FOR REINFORCEMENT:

   CONTRACTOR SHALL PROVIDE PROTECTIVE COVER FOR REINFORCING LISTED IN THIS SECTION (UNLESS NOTED OTHERWISE):
   - (A) 3" FOR CONCRETE GRADE BEAMS AND FOOTINGS DEPOSITED DIRECTLY AGAINST THE GROUND.
   - (B) 2" FOR FORMED CONCRETE EXPOSED TO WEATHER OR IN CONTACT WITH THE GROUND.
   - (C) 1" FOR CONCRETE SLABS AND WALLS NOT EXPOSED TO WEATHER OR IN CONTACT WITH THE GROUND
   - (D) 1 1/2" FOR CONCRETE BEAMS, GIRDERS, AND COLUMNS NOT EXPOSED TO WEATHER OR IN CONTACT WITH THE GROUND.
7. PLACEMENT:

   PLACEMENT SHALL MEET THE SPECIFICATIONS LISTED IN THIS SECTION (UNLESS NOTED OTHERWISE):
   - (A) BARS SHALL BE SECURELY SUPPORTED TO PREVENT BOTH VERTICAL AND HORIZONTAL MOVEMENT DURING CONCRETE PLACEMENT.
   - (B) REINFORCING BARS OR FABRIC ON GRADE SHALL BE CHAIRED WITH 3000 PSI CONCRETE BRICKETTES SPACED ADEQUATELY TO SUPPORT THE REINFORCING, BUT NOT GREATER THAN 3'-0" O.C. EACH WAY. AT RAISED FLOORS USE METAL CHAIRS.
   - (C) PROVIDE A 90 DEGREE HOOK ON ALL TOP REINFORCING IN ALL BEAMS AT DISCONTINUOUS ENDS AND LAP SPLICE 30 BAR DIAMETERS AT MID-SPAN.
   - (D) CONTINUOUS BOTTOM BARS SHOULD BE LAP SPLICED 6" AT CENTER OF SUPPORT.
   - (E) LAP ALL WELDED WIRE FABRIC ONE WIRE SPACING PLUS 6 INCHES.
   - (F) COLUMN VERTICAL REINFORCING SHALL HAVE STANDARD HOOKS AT THE TOP OF THE UPPERMOST SECTION OF EACH COLUMN.
   - (G) PROVIDE CORNER BARS AT EACH OUTSIDE CORNER FOR EACH HORIZONTAL BAR IN WALLS AND BEAMS. HOOK INSIDE BAR IN WALLS AT ENDS.
   - (H) PLACEMENT OF SLEEVES, HOLES, OR OPENINGS THROUGH BEAMS, FOOTINGS, PILE CAPS, SLABS, ETC. IS NOT PERMITTED WITHOUT ENGINEER OF RECORD'S APPROVAL
   - (I) WHERE POSSIBLE, EXISTING REINFORCEMENT SHALL NOT BE CUT, BENT, OR DAMAGED. WHENEVER REINFORCEMENT IS CUT, DAMAGED OR BENT, IT SHALL BE BROUGHT TO THE ATTENTION OF THE ENGINEER OF RECORD. REINFORCEMENT SHALL BE REPAIRED OR REPLACED AS DIRECTED.
8. SPLICES:

   REINFORCEMENT STEEL SPLICES SHALL MEET THE SPECIFICATIONS LISTED IN THIS SECTION (UNLESS NOTED OTHERWISE):
   - (A) REINFORCING BARS SHALL BE SPLICED WITH CLASS "B" LAP SPLICES.
   - (B) PROVIDE REQUIRED LAP LENGTHS FOR CORNER BARS, TEMPERATURE BARS IN SLAB, INTERMEDIATE HORIZONTAL BARS IN WALLS AND BEAMS, ETC.
9. EXPANSION JOINTS AND JOINT SEALERS:

   EXPANSION JOINTS SHALL MEET THE SPECIFICATIONS LISTED IN THIS SECTION (UNLESS NOTED OTHERWISE):
   - (A) EXPANSION JOINT MATERIAL SHALL BE 1/2" THICK SEAL-TIGHT ASPHALT EXPANSION JOINT FILLER OR APPROVED EQUAL.
   - (B) EXPANSION JOINTS SHALL SEPARATE PAVING FROM FOUNDATION GRADE BEAMS, FOOTINGS, ETC. AS SHOWN ON DRAWINGS.
10. EMBEDMENTS:

    CONDUITS, PIPES, ETC. EMBEDDED IN CONCRETE SHALL MEET THE SPECIFICATIONS LISTED IN THIS SECTION (UNLESS NOTED OTHERWISE):
    - (A) CONTRACTOR SHALL SUBMIT FOR APPROVAL A DIAGRAM DEPICTING ALL CONDUITS, PIPES, OR SLEEVES EMBEDDED IN CONCRETE.
    - (B) CONTRACTOR SHALL FOLLOW ALL REGULATIONS OUTLINED IN THE APPLICABLE ACI CODES FOR EMBEDDING CONDUITS, PIPES, ETC.
    - (C) CONDUITS, PIPES, AND SLEEVES OF ANY MATERIAL NOT HARMFUL TO CONCRETE SHALL BE PERMITTED TO BE EMBEDDED IN CONCRETE WITH THE ENGINEER OF RECORD'S APPROVAL.
    - (D) IT WILL NOT BE PERMITTED TO CUT, BEND, OR DISPLACE THE REINFORCING STEEL FROM ITS PROPER LOCATION TO INSTALL CONDUITS, PIPES, ETC. WITHOUT THE ENGINEER OF RECORD'S APPROVAL.
    - (E) CONDUITS, PIPES, AND SLEEVES PASSING THROUGH A SLAB, BEAM, OR WALL SHALL NOT SIGNIFICANTLY IMPAIR THE STRENGTH OF CONSTRUCTION.
    - (F) OUTSIDE DIMENSIONS FOR SINGLE CONDUITS AND PIPES OR INTERSECTING CONDUITS AND PIPES SHALL NOT OCCUPY MORE THAN AN 1/3 THE OVERALL THICKNESS OF SLAB, BEAM, OR WALL IN WHICH THEY ARE EMBEDDED. ANY CONDUIT OR PIPE LARGER SHALL BE LOCATED BELOW THE RESPECTIVE SLAB OR BEAM.
    - (G) CONDUITS, PIPES, ETC. SHALL NOT BE SPACED CLOSER THAN THREE DIAMETERS OR WIDTHS ON CENTER.

CONCRETE NOTES (CONT.):

11. DRILLING HOLES OR CORING HOLES IN EXISTING CONCRETE:

    DRILLING OR CORING HOLES IN EXISTING CONCRETE SHALL MEET THE SPECIFICATIONS LISTED IN THIS SECTION (UNLESS NOTED OTHERWISE):
    - (A) PRIOR TO DRILLING OR CORING HOLES, THE CONTRACTOR SHALL LOCATE ALL EXISTING REINFORCING STEEL, POST-TENSIONING, CONDUIT, PIPING, ETC. THROUGH NON-DESTRUCTIVE TESTING SUCH AS WITH AN X-RAY, RADAR, ETC.
    - (B) CONTRACTOR SHALL MARK THE LOCATION OF ALL REINFORCING STEEL, POST-TENSIONING, CONDUIT, PIPING, AND OTHER EXISTING INTERFERENCES ON THE SURFACE OF THE CONCRETE.
    - (C) CONTRACTOR SHALL NOTIFY THE ENGINEER OF RECORD FOR ALL CONFLICTS BETWEEN NEW HOLES AND EXISTING REINFORCING, POST-TENSIONING, CONDUIT, PIPING, ETC.
    - (D) CONTRACTOR SHALL DRILL SMALL PILOT HOLES AT NEW HOLE LOCATIONS TO VERIFY NO CONFLICTS EXIST. IF NO CONFLICTS EXIST, COMPLETE THE INSTALLATION. IN THE CASE OF STEEL TO BE FASTENED TO THE EXISTING CONCRETE WITH MULTIPLE ANCHORS, FABRICATE FROM A FIELD TEMPLATE, THE STEEL TO BE FASTENED TO THE CONCRETE BY THE ANCHORS AND COMPLETE THE INSTALLATION.
    - (E) CONTRACTOR SHALL EXERCISE CARE WHEN INSTALLING NEW HOLES TO PREVENT "NICKING" OR CUTTING EXISTING REINFORCING STEEL, POST-TENSIONING, CONDUIT, PIPING, ETC.
12. QUALITY CONTROL TESTING DURING CONSTRUCTION
    - (A) GENERAL: EMPLOY A TESTING AGENCY TO PERFORM TESTS AND TO SUBMIT TEST REPORTS.
    - (B) SAMPLING AND TESTING FOR QUALITY CONTROL DURING CONCRETE PLACEMENT SHALL INCLUDE THE FOLLOWING, AS DIRECTED BY ARCHITECT.
      1. SAMPLING FRESH CONCRETE: ASTM C 172, EXCEPT MODIFIED FOR SLUMP TO COMPLY WITH ASTM C 94
      2. SLUMP: ASTM C 143; ONE TEST AT POINT OF DISCHARGE FOR EACH DAY'S POUR OF EACH TYPE OF CONCRETE, ADDITIONAL TESTS WHEN CONCRETE CONSISTENCY SEEMS TO HAVE CHANGED.
      3. AIR CONTENT: ASTM C 173, VOLUMETRIC METHOD FOR LIGHTWEIGHT OR NORMAL WEIGHT CONCRETE; ASTM C 231, PRESSURE METHOD FOR NORMAL WEIGHT CONCRETE; ONE FOR EACH DAY'S POUR OF EACH TYPE OF AIR-ENTRAINED CONCRETE.
      4. CONCRETE TEMPERATURE: ASTM C 1064; ONE TEST HOURLY WHEN AIR TEMPERATURE IS 40 DEG F (4 DEG C) AND BELOW, WHEN 80 DEG F (27 DEG C) AND ABOVE, AND ONE TEST FOR EACH SET OF COMPRESSIVE-STRENGTH SPECIMENS.
      5. COMPRESSION TEST SPECIMEN: ASTM C 31, ONE SET OF FOUR STANDARD CYLINDERS FOR EACH COMPRESSIVE-STRENGTH TEST, UNLESS OTHERWISE DIRECTED. MOLD AND STORE CYLINDERS FOR LABORATORY-CURED TEST SPECIMENS EXCEPT WHEN FIELD-CURED TEST SPECIMENS ARE REQUIRED.
      6. COMPRESSIVE-STRENGTH TESTS: ASTM C 39; ONE SET FOR EACH DAY'S POUR EXCEEDING 5 CU. YD. PLUS ADDITIONAL SETS FOR EACH 50 CU. YD MORE THAN THE FIRST 25 CU. YD. OF EACH CONCRETE CLASS PLACED IN ANY ONE DAY; ONE SPECIMEN TESTED 7 DAYS, TWO SPECIMENS TESTED AT 28 DAYS, AND ONE SPECIMEN RETAINED IN RESERVE FOR LATER TESTING IF REQUIRED.
    - (C) WHEN FREQUENCY OF TESTING WILL PROVIDE FEWER THAN FIVE STRENGTH TESTS FOR A GIVEN CLASS OF CONCRETE, CONDUCT TESTING FROM AT LEAST FIVE RANDOMLY SELECTED BATCHES OR FROM EACH BATCH IF FEWER THAN FIVE ARE USED.
    - (D) TEST RESULTS WILL BE REPORTED IN WRITING TO ARCHITECT, STRUCTURAL ENGINEER, READY-MIX PRODUCER, AND CONTRACTOR WITHIN 24 HOURS AFTER TESTS. REPORTS OF COMPRESSIVE STRENGTH TESTS SHALL CONTAIN THE PROJECT IDENTIFICATION NAME AND NUMBER, DATE OF CONCRETE PLACEMENT, NAME OF CONCRETE TESTING SERVICE, CONCRETE TYPE AND CLASS, LOCATION OF CONCRETE BATCH IN STRUCTURE, DESIGN COMPRESSIVE STRENGTH AT 28 DAYS, CONCRETE MIX PROPORTIONS AND MATERIALS, COMPRESSIVE BREAKING STRENGTH, AND TYPE OF BREAK FOR BOTH 7-DAY TESTS AND 28-DAY TEST.
    - (E) NONDESTRUCTIVE TESTING: IMPACT HAMMER, SONOSCOPE, OR OTHER NONDESTRUCTIVE DEVICE MAY BE PERMITTED BY SHALL NOT BE USED AS THE SOLE BASIS FOR ACCEPTANCE OR REJECTION.
    - (F) ADDITIONAL TEST: THE TESTING AGENCY WILL MAKE ADDITIONAL TESTS OF IN-PLACE CONCRETE WHEN TEST RESULTS INDICATE SPECIFIED CONCRETE STRENGTHS AND OTHER CHARACTERISTICS HAVE NOT BEEN ATTAINED IN THE STRUCTURE, AS DIRECTED BY ARCHITECT. TESTING AGENCY MAY CONDUCT TESTS TO DETERMINE ADEQUACY OF CONCRETE BY CORED CYLINDERS COMPLYING WITH ASTM C 42, OR BY OTHER METHODS AS DIRECTED.

AXIS ENGINEERING
CIVIL I STRUCTURAL
3500 N. CAUSEWAY BLVD., #650, METAIRIE, LA 70002
504.380.0800 OFFICE - INFO@AXISENGR.COM EMAIL

THESE PLANS HAVE BEEN PREPARED BY ME OR UNDER MY CLOSE PERSONAL SUPERVISION AND TO THE BEST OF MY KNOWLEDGE AND BELIEF, THEY COMPLY WITH ALL LOCAL, REGIONAL AND NATIONAL REQUIREMENTS. I AM NOT OBSERVING THE WORK.

ENGINEER: JAMES B HEASLIP AE PROJECT #: 24123
LICENSE NUMBER: 31593

ADAMICK ARCHITECTURE
3301 CHIPPEWA STREET
NEW ORLEANS, LA 70115
504.322.1220

Project: #2024-19

COOK RESIDENCE RENOVATION & ADDITION

ADDRESS:
1317-1319 ADAMS ST. NEW ORLEANS, LA 70118

GENERAL STRUCTURAL NOTES

STATE OF LOUISIANA
JAMES B. HEASLIP II
REG. No. 31593
REGISTERED PROFESSIONAL ENGINEER IN CIVIL ENGINEERING

DATE:	01/13/2025
PROJECT NO.:	2024-19
DRAWING BY:	WMF
CHK BY:	JBH
DWG NO.:	S1.0A
CAD FILE NO:	

CONCRETE MASONRY UNIT (CMU) NOTES:

1. APPLICABLE CODES OR STANDARDS:

   ALL DESIGN, FABRICATION, TESTING, AND ERECTION SHALL BE IN ACCORDANCE WITH THE FOLLOWING CODES AND STANDARDS:

   (A) TMS "BUILDING CODE REQUIREMENTS AND SPECIFICATION FOR MASONRY STRUCTURES"

   (B) ASTM STANDARDS FOR THE MATERIALS LISTED.

2. MATERIALS:

   MATERIALS SHALL MEET THE SPECIFICATIONS LISTED IN THIS SECTION (UNLESS NOTED OTHERWISE):

   (A) HOLLOW CORE CONCRETE MASONRY UNITS SHALL MEET ASTM C90, LIGHTWEIGHT, TYPE 1, AND HAVE A MINIMUM COMPRESSIVE STRENGTH OF 1,900 PSI ON THE NET AREA FOR INDIVIDUAL UNITS.

   (B) CMU MORTAR SHALL MEET ASTM C270, TYPE "M" OR "S" AND HAVE A MINIMUM COMPRESSIVE CUBE STRENGTH OF 1,800 PSI AT 28 DAYS.

   (C) CMU GROUT (POURED OR PUMPED) SHALL MEET ASTM C476 AND HAVE A MINIMUM COMPRESSIVE STRENGTH OF 3,000 PSI AT 28 DAYS.

   (D) REINFORCED MASONRY WALLS SHALL HAVE A MINIMUM COMPRESSIVE STRENGTH OF 2,000 PSI.

   (E) STEEL REINFORCING BARS SHALL MEET ASTM A615 GRADE 60.

   (F) JOINT REINFORCING SHALL MEET ASTM A82.

3. REINFORCEMENT:

   REINFORCEMENT SHALL MEET THE SPECIFICATIONS LISTED IN THIS SECTION (UNLESS NOTED OTHERWISE):

   (A) REINFORCEMENT SHALL BE HELD IN PLACE PRIOR TO GROUTING WITH WIRE POSITIONERS SPACED AT INTERVALS NOT EXCEEDING 192 REINFORCING BAR DIAMETERS FOR 10 FEET. ADDITIONAL POSITIONERS SHALL BE PLACED AT ALL REINFORCING BAR SPLICES.

   (B) PROVIDE HORIZONTAL BOND BEAMS AT THE TOP OF ALL WALLS AND AT ROOF. BOND BEAMS SHALL BE REINFORCED AS FOLLOWS:

   WALL WIDTH: 8"

   REINFORCING: 2 – #5

   (C) CONCRETE MASONRY WALLS SHALL HAVE 2 – NO. 9 WIRE GALVANIZED HORIZONTAL JOINT REINFORCEMENT EVERY OTHER COURSE, IN ADDITION TO HORIZONTAL BOND BEAM REINFORCEMENT. TERMINATE BOND BEAM AND HORIZONTAL JOINT REINFORCING AT CONTROL JOINTS.

   (D) REINFORCE MASONRY AT BEARING POINTS OF ALL BEAMS, LINTELS, ETC. WITH 1 – #6 (CONTINUOUS TO FOUNDATION) IN EACH BLOCK CORE BENEATH BEARING PLATES.

   (E) PROVIDE DOWELS FOR CMU WALL CONNECTION TO CONCRETE BEAMS, SLABS, AND FOOTINGS. LAP DOWELS 2'–0" (MIN.) WITH VERTICAL BARS.

   (F) REINFORCEMENT, REBAR POSITIONERS, AND TIES SHALL BE PLACED PRIOR TO GROUTING.

4. GROUTING

   (A) CMU TO BE LAID IN RUNNING BOND PATTERN

   (B) GROUT PLACEMENT SHALL CONFORM TO APPLICABLE DESIGN STANDARDS; HOWEVER, THE MAXIMUM GROUT POUR HEIGHT SHALL NOT EXCEED 8 FEET AND THE MAXIMUM HEIGHT WHICH GROUT IS PLACED IN ONE CONTINUOUS OPERATION (GROUT LIFT) SHALL NOT EXCEED 4 FEET. THERE SHALL BE A MINIMUM OF 1 HOUR SETTING TIME BETWEEN EACH GROUT LIFT.

   (C) CLEANOUTS SHALL BE CONSTRUCTED ADJACENT TO EACH VERTICAL BAR IN THE BOTTOM COURSE OF MASONRY FOR EACH GROUT POUR HEIGHT THAT EXCEEDS 5 FEET. CONSTRUCT CLEANOUTS WITH AN OPENING OF SUFFICIENT SIZE TO PERMIT REMOVAL OF DEBRIS, BUT NO LESS THAN 3 IN. DIMENSION. AFTER CLEANING, CLOSE CLEANOUTS WITH CLOSURES BRACED TO RESIST GROUT PRESSURE. ALL CLEANOUTS SHALL BE LOCATED ON WALL FACE NOT EXPOSED TO VIEW.

   (D) THE TOP OF EACH GROUT POUR SHALL BE 1" BELOW THE BED JOINT.

5. SHORING

   (A) SHORE ALL MASONRY LINTELS UNTIL MASONRY AND GROUT HAVE BEEN ALLOWED TO SET FOR A MINIMUM OF 7 DAYS.

   (B) CONTRACTOR SHALL DESIGN, FABRICATE AND INSTALL BRACING THAT WILL ASSURE THE STABILITY OF THE MASONRY DURING CONSTRUCTION.

METAL FLOOR DECK NOTES:

UNLESS NOTED OTHERWISE, METAL FLOOR DECK SHALL MEET THE SPECIFICATIONS LISTED IN THIS SECTION:

1. DECKS SHALL MATCH TYPE AND DIRECTION SHOWN ON DRAWINGS.
2. CONTRACTOR SHALL PROVIDE STEEL ANGLE OR STEEL BENT PLATE ATTACHED TO TOP OF SUPPORT BEAMS ON ALL SIDES OF OPENING THROUGH ELEVATED FLOORS AS SHOWN ON DRAWINGS.
3. CONTRACTOR SHALL PROVIDE POUR STOPS OF LENGTH, DEPTH, AND GAUGE APPROPRIATE FOR OVERHANG AND SLAB DEPTH.
4. CONTRACTOR SHALL SUPPORT FLOOR DECK AROUND ALL OPENINGS AND COLUMNS.
5. CONTRACTOR SHALL NOTIFY THE ENGINEER OF RECORD FOR ANY FLOOR DECK OPENINGS LARGER THAN 12 INCHES WHICH ARE NOT SHOWN ON THE DRAWINGS.
6. CONTRACTOR SHALL TOUCH UP IMPERFECTIONS WITH GALVANIZED REPAIR PAINT BEFORE PLACING CONCRETE FLOOR SLABS.

WOOD FRAMING NOTES:

1. APPLICABLE CODES OR STANDARDS:

   ALL DESIGN, FABRICATION, TESTING, AND ERECTION SHALL BE IN ACCORDANCE WITH THE FOLLOWING CODES AND STANDARDS:

   (A) IRC – INTERNATIONAL RESIDENTIAL CODE (IRC)

   (B) AWC – NATIONAL DESIGN SPECIFICATION FOR WOOD CONSTRUCTION (NDS)

   (C) AWC – WOOD FRAME CONSTRUCTION MANUAL FOR ONE AND TWO–FAMILY DWELLINGS (WFCM)

   (D) APA – PLYWOOD DESIGN SPECIFICATION (PDS)

2. WALL SYSTEMS:

   WALL SYSTEMS SHALL MEET THE SPECIFICATIONS LISTED IN THE PLAN NOTES (UNLESS NOTED OTHERWISE).

3. MATERIALS:

   MATERIALS SHALL MEET THE SPECIFICATIONS LISTED IN THIS SECTION (UNLESS NOTED OTHERWISE):

   (A) FRAMING LUMBER SHALL BE SOUTHERN PINE GRADE MARKED AND KILN DRIED, NO. 2.

   (B) ALL LUMBER IN CONTACT WITH CONCRETE OR MASONRY SHALL BE TREATED. LUMBER, PLYWOOD, PSL, OR OTHER STRUCTURAL WOOD ELEMENTS SHALL BE PRESSURE TREATED IN ACCORDANCE WITH AWPA.

   (C) FLOOR PLYWOOD SHEATHING SHALL BE 3/4" THICK.

   (D) WALL PLYWOOD SHEATHING SHALL BE 1/2" THICK.

   (E) ATTIC PLYWOOD SHEATHING SHALL BE 1/2" THICK.

   (F) ROOF PLYWOOD SHEATHING SHALL BE 5/8" THICK.

   (G) MEMBERS DESIGNATED AS "LVL" SHALL BE LAMINATED VENEER LUMBER HAVING PROPERTIES AND STRENGTHS EQUAL TO THE i–LEVELTRUSS JOIST COMPANY'S "MICROLLAM" OR APPROVED EQUAL.

   (H) MEMBERS DESIGNATED AS "PSL" SHALL BE PARALLEL STRAND LUMBER HAVING PROPERTIES AND STRENGTHS EQUAL TO THE i–LEVEL TRUSS JOIST COMPANY'S "PARALLAM" OR APPROVED EQUAL.

   (I) MEMBERS DESIGNATED AS "TJI" SHALL BE "I–SHAPED" WOOD JOIST LUMBER HAVING PROPERTIES AND STRENGTHS EQUAL TO THE i–LEVEL TRUSS JOIST COMPANY'S "TRUS JOIST" OR APPROVED EQUAL.

   (J) MEMBERS DESIGNATED AS "PPG" SHALL BE GLULAM LUMBER HAVING PROPERTIES AND STRENGTHS EQUAL TO THE ANTHONY FOREST PRODUCTS COMPANY'S "POWER PRESERVED GLULAM" OR APPROVED EQUAL.

   (K) JOIST HANGERS, BEAM HANGERS, HURRICANE CLIPS, ANCHORS, AND CONNECTORS SHALL BE SUPPLIED BY SIMPSON STRONG–TIE CO., INC. OR APPROVED EQUAL AND ATTACHED WITH MANUFACTURER RECOMMENDATIONS.

   (L) HANGERS, CLIPS, CONNECTORS, ANCHORS, TIES, ETC. SHALL BE GALVANIZED.

   (M) HANGERS, CLIPS, CONNECTORS, ANCHORS, TIES, ETC. EXPOSED TO WEATHER, IN CONTACT WITH EARTH OR WATER, OR BELOW THE FIRST FLOOR LEVEL SHALL RECEIVE THE SIMPSON "Z–MAX" TRIPLE ZINC COATING OR APPROVED EQUAL.

   (N) STUD WALL BOTTOM PLATES CONNECTED TO CONCRETE SHALL BE SUPPLIED BY RAMSET OR APPROVED EQUAL.

4. CONNECTIONS:

   CONNECTIONS SHALL MEET THE SPECIFICATIONS LISTED IN THIS SECTION (UNLESS NOTED OTHERWISE):

   (A) WOOD MEMBERS (INCLUDING PLYWOOD SHEATHING OR BRACING) SHALL BE CONNECTED OR FASTENED WITH STEEL NAILS, SCREWS, OR BOLTS. ALL EXPOSED NAILS, SCREWS, OR BOLTS SHALL BE POLYMER COATED OR GALVANIZED.

   (B) NO STAPLES SHALL BE PERMITTED.

   (C) WOOD CONNECTIONS SHALL BE IN ACCORDANCE WITH THE FASTENING SCHEDULE LISTED IN IRC 2021 TABLE R602.3.

   (D) MEMBER END PIECES, JOINTS, OR SPLICES SHALL BE OVER SUPPORTS.

   (E) MULTIPLE PIECES OF LUMBER OR MANUFACTURED WOOD PRODUCTS USED TO FORM BEAM OR HEADER MEMBERS SHALL BE ATTACHED TOGETHER WITH (2) ROWS OF 12d NAILS SPACED AT 12" FOR PIECES UP TO 12" DEEP. ALL OTHER PIECES SHALL BE ATTACHED TOGETHER WITH (3) ROWS OF 12d NAILS SPACED AT 12".

   (F) MULTIPLE PIECES OF LUMBER USED TO FORM PACKED STUDS SHALL BE ATTACHED TOGETHER WITH (2) ROWS OF NAILS SPACED AT 8".

   (G) PLYWOOD WALL SHEATHING SHALL HAVE SOLID BLOCKING AT ALL HORIZONTAL JOINTS.

   (H) PLYWOOD ROOF SHEATHING VERTICAL JOINTS SHALL BE STAGGERED EVERY 4 FEET OR LESS.

   (I) FLOOR JOISTS SHALL HAVE BRIDGING AT 8'–0" O.C. (MAX.).

   (J) BOTTOM PLATE OF STUD WALLS TO CONCRETE SHALL BE CONNECTED WITH 1/4" RAMSETS AT 16" O.C.

   (K) PRE–ENGINEERED STRUCTURAL MEMBERS INCLUDING PSL, PPG, LVL, ETC. SHALL BE ERECTED AND BRACED IN ACCORDANCE WITH MANUFACTURER SPECIFICATIONS.

5. OPENINGS:

   OPENINGS SHALL MEET THE SPECIFICATIONS LISTED IN THIS SECTION (UNLESS NOTED OTHERWISE):

   (A) OPENINGS IN WALLS SHALL HAVE HEADERS CONSISTING OF A MINIMUM OF TWO 2x12's OR THREE 2x10's (4'–0" MAX.).

   (B) OPENINGS IN EXTERIOR WALLS SHALL BE IN ACCORDANCE WITH THE FULL HEIGHT STUD REQUIREMENTS LISTED IN WFCM TABLE 3.23C.

   (C) FULL HEIGHT STUDS MAY BE REDUCED IN ACCORDANCE WITH THE REQUIREMENTS LISTED IN WFCM TABLE 3.23D.

   (D) JACK STUDS SHALL BE IN ACCORDANCE WITH THE REQUIREMENTS LISTED IN WFCM TABLE 3.22F.

6. PRE–ENGINEERED WOOD TRUSSES:

   PRE–ENGINEERED WOOD TRUSSES SHALL MEET THE SPECIFICATIONS LISTED IN THIS SECTION (UNLESS NOTED OTHERWISE):

   (A) TRUSSES SHALL BE DESIGNED TO MEET THE REQUIREMENTS OF THE NATIONAL DESIGN SPECIFICATION BY THE NFPA AND THE IRC.

   (B) THE DESIGN, CONFIGURATION, LAYOUT, SPACING, ETC. OF ALL TRUSSES SHALL BE COORDINATED BY THE CONTRACTOR AND TRUSS MANUFACTURER WITH THE MECHANICAL EQUIPMENT, DUCTWORK, AND ARCHITECTURAL DRAWINGS.

   (C) THE CONTRACTOR SHALL SUBMIT SHOP DRAWINGS OF THE TRUSSES FOR REVIEW BY THE ENGINEER OF RECORD. THE SHOP DRAWINGS SHALL BE STAMPED BY A PROFESSIONAL ENGINEER.

   (D) EVERY TRUSS MEMBER SHALL BE SIZED AND BRACED SO THAT THE RATIO OF ITS LENGTH TO ITS DEPTH AND ITS THICKNESS (L/D) IS LESS THAN 50. MANY OF THE CEILINGS WILL NOT BE RIGIDLY ATTACHED TO THE TRUSS BOTTOM CHORDS. WHERE THIS OCCURS, LATERAL BRACING MUST BE DESIGNED AND INSTALLED ON THE BOTTOM CHORDS TO MEET THE LESS THAN 50 (L/D) RATIO.

   (E) ATTACH TRUSSES TO SUPPORTS WITH SPECIFIED GALVANIZED METAL CONNECTORS.

   (F) IF SHEET METAL CONNECTORS ARE USED, THE CONNECTORS AT EVERY JOINT SHALL BE SIZED FOR TWICE THE CALCULATED LOAD AT THE JOINT.

DESIGN INFORMATION:

1. DESIGN LOADS SHALL MEET THE SPECIFICATIONS LISTED IN THIS SECTION (UNLESS NOTED OTHERWISE).

   (A) DESIGN BUILDING CODE – 2021 INTERNATIONAL RESIDENTIAL CODE (IRC)

   (B) DESIGN GRAVITY LOADS:

FIRST FLOOR	DL = 10 PSF LL = 40 PSF
SECOND FLOOR	DL = 10 PSF LL = 30 PSF
ATTIC	DL = 10 PSF LL = 20 PSF
ROOF	DL = 15 PSF LL = 20 PSF

   (C) WIND LOADS SHALL BE IN ACCORDANCE WITH ASCE 7–16:
   MAIN WIND FORCE RESISTING SYSTEM

PARAMETER	VALUE	REFERENCE
RISK CATEGORY	II	TABLE 1.5–1
BASIC WIND SPEED	Vult. = 144 MPH Vasd. = 113 MPH	FIGURE 26.5–1B
DIRECTIONALITY	Kd = 0.85	FIGURE 26.6–1
EXPOSURE CATEGORY	B	SECTION 26.7
TOPOGRAPHIC FACTOR	Kzt = 1.0	FIGURE 26.8–1
GUST EFFECT FACTOR	0.85	SECTION 26.9
ENCLOSURE CLASSIFICATION	ENCLOSED	SECTION 26.10
INTERNAL PRESSURE COEFFICIENT	GCpi = +/–0.18	SECTION 26.11
VELOCITY	qh = 31.15 PSF	SECTION 28.3.2

AXIS ENGINEERING
CIVIL I STRUCTURAL
3500 N. CAUSEWAY BLVD., #650, METAIRIE, LA 70002
504.380.0800 OFFICE - INFO@AXISENGR.COM EMAIL

THESE PLANS HAVE BEEN PREPARED BY ME OR UNDER MY CLOSE PERSONAL SUPERVISION AND TO THE BEST OF MY KNOWLEDGE AND BELIEF, THEY COMPLY WITH ALL LOCAL, REGIONAL AND NATIONAL REQUIREMENTS. I AM NOT OBSERVING THE WORK.

ENGINEER: JAMES B HEASLIP AE PROJECT #: 24123

LICENSE NUMBER: 31593

ADAMICK ARCHITECTURE
3301 CHIPPEWA STREET
NEW ORLEANS, LA 70115
504.322.1220

Project: #2024-19

COOK RESIDENCE RENOVATION & ADDITION

ADDRESS:
1317-1319 ADAMS ST. NEW ORLEANS, LA 70118

GENERAL STRUCTURAL NOTES

STATE OF LOUISIANA
JAMES B. HEASLIP II
REG. No. 31593
REGISTERED PROFESSIONAL ENGINEER IN
CIVIL ENGINEERING

DATE:	01/13/2025
PROJECT NO.:	2024-19
DRAWING BY:	WMF
CHK BY:	JBH
DWG NO.:	S1.0B
CAD FILE NO:	

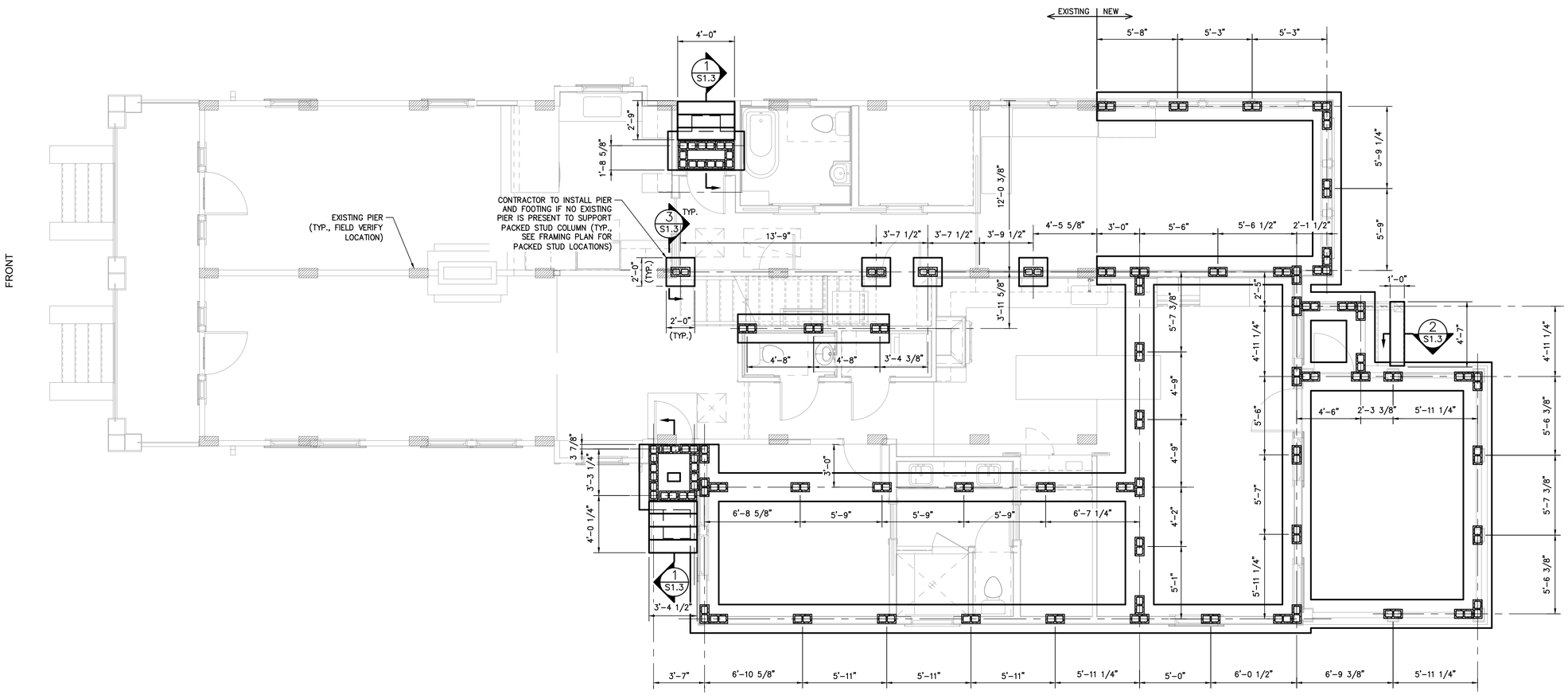

FOUNDATION / CMU LAYOUT PLAN

SCALE: 1/4" = 1'-0"

PLAN NOTES:

1. FOR ALL NOTES, SEE DRAWING S1.0A – S1.0B.
2. – SYMBOL ON PLAN INDICATES 8" CMU BLOCK PIER:
   A. GROUT FILL ALL CELLS
3. – SYMBOL ON PLAN INDICATES 8" CMU BLOCK WALL:
   A. GROUT FILL ALL CELLS
   B. REINFORCEMENT: #5 @ 24" O.C.
4. – SYMBOL ON PLAN INDICATES EXISTING PIER LOCATION (FIELD VERIFY).
5. PRIOR TO CONSTRUCTION, CONTRACTOR TO VERIFY ALL ELEVATIONS AND DIMENSIONS WITH ARCHITECTURAL DRAWINGS.
6. MEASUREMENTS ARE TO EDGE OF FRAMING. SEE ARCHITECTURAL DRAWINGS FOR FINISHED DIMENSIONS.
7. PROVIDE BLOCKING WHERE JOIST SPAN EXCEED 8'–0".
8. ALL FLOOR JOIST AND SILL MEMBERS BELOW B.F.E. TO BE PRESSURE TREATED.
9. ALL PACKED STUD COLUMNS INSIDE STUD WALLS SHALL BE BLOCKED BELOW THE COLUMNS AT THE FIRST FLOOR FRAMING TO TRANSFER ALL LOADS INTO SILLS BELOW.

ADAMICK ARCHITECTURE
3301 CHIPPEWA STREET
NEW ORLEANS, LA 70115
504.322.1220

Project: #2024-19

COOK RESIDENCE RENOVATION & ADDITION

ADDRESS:
1317-1319 ADAMS ST. NEW ORLEANS, LA 70118

FOUNDATION / CMU LAYOUT PLAN

AXIS ENGINEERING
CIVIL I STRUCTURAL
3500 N. CAUSEWAY BLVD., #650, METAIRIE, LA 70002
504.380.0800 OFFICE - INFO@AXISENGR.COM EMAIL

THESE PLANS HAVE BEEN PREPARED BY ME OR UNDER MY CLOSE PERSONAL SUPERVISION AND TO THE BEST OF MY KNOWLEDGE AND BELIEF, THEY COMPLY WITH ALL LOCAL, REGIONAL AND NATIONAL REQUIREMENTS. I AM NOT OBSERVING THE WORK.

ENGINEER: JAMES B HEASLIP AE PROJECT #: 24123
LICENSE NUMBER: 31593

STATE OF LOUISIANA
JAMES B. HEASLIP II
REG. No. 31593
REGISTERED PROFESSIONAL ENGINEER IN
CIVIL ENGINEERING

DATE:	01/13/2025
PROJECT NO.:	2024-19
DRAWING BY:	WMF
CHK BY:	JBH
DWG NO.:	S1.1
CAD FILE NO:	

PLAN NOTES:

1. FOR ALL NOTES, SEE DRAWINGS S1.0A – S1.0B.
2. FOR ALL PLAN NOTES, SEE DRAWING S1.1.

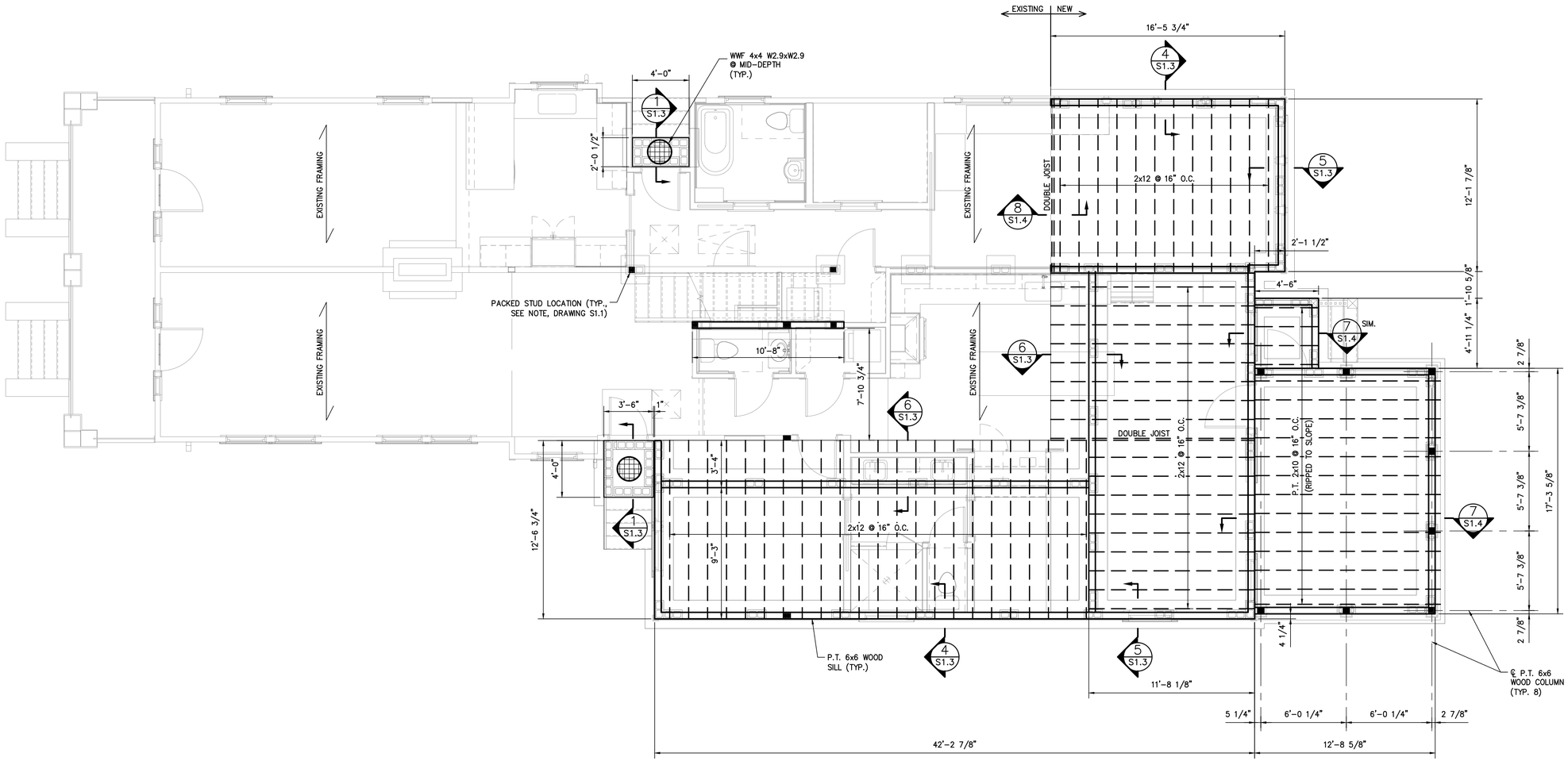

FIRST FLOOR FRAMING PLAN

SCALE: 1/4" = 1'-0"

ADAMICK ARCHITECTURE
3301 CHIPPEWA STREET
NEW ORLEANS, LA 70115
504.322.1220

Project: #2024-19

COOK RESIDENCE RENOVATION & ADDITION

ADDRESS:
1317-1319 ADAMS ST. NEW ORLEANS, LA 70118

FIRST FLOOR FRAMING PLAN

AXIS ENGINEERING
CIVIL I STRUCTURAL
3500 N. CAUSEWAY BLVD., #650, METAIRIE, LA 70002
504.380.0800 OFFICE - INFO@AXISENGR.COM EMAIL

THESE PLANS HAVE BEEN PREPARED BY ME OR UNDER MY CLOSE PERSONAL SUPERVISION AND TO THE BEST OF MY KNOWLEDGE AND BELIEF, THEY COMPLY WITH ALL LOCAL, REGIONAL AND NATIONAL REQUIREMENTS. I AM NOT OBSERVING THE WORK.

ENGINEER: JAMES B HEASLIP AE PROJECT #:24123

LICENSE NUMBER: 31593

STATE OF LOUISIANA
JAMES B. HEASLIP II
REG. No. 31593
REGISTERED PROFESSIONAL ENGINEER IN
CIVIL ENGINEERING

DATE:	01/13/2025
PROJECT NO.:	2024-19
DRAWING BY:	WMF
CHK BY:	JBH
DWG NO.:	S1.2
CAD FILE NO:	

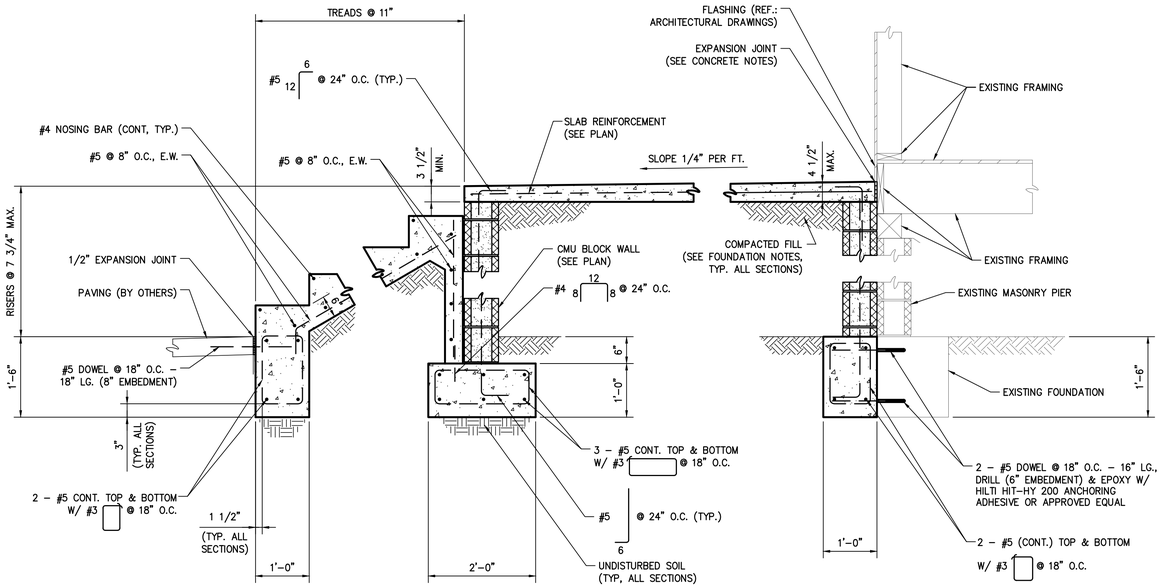

SECTION 1
SCALE: 3/4" = 1'-0" S1.1 S1.3

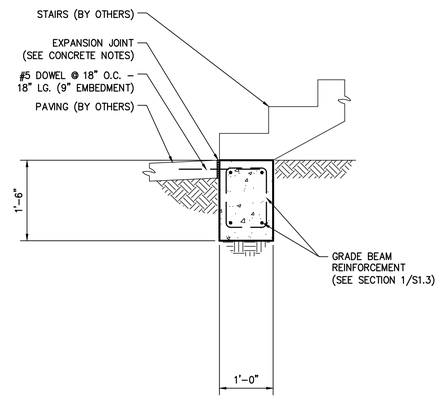

SECTION 2
SCALE: 3/4" = 1'-0" S1.1 S1.3

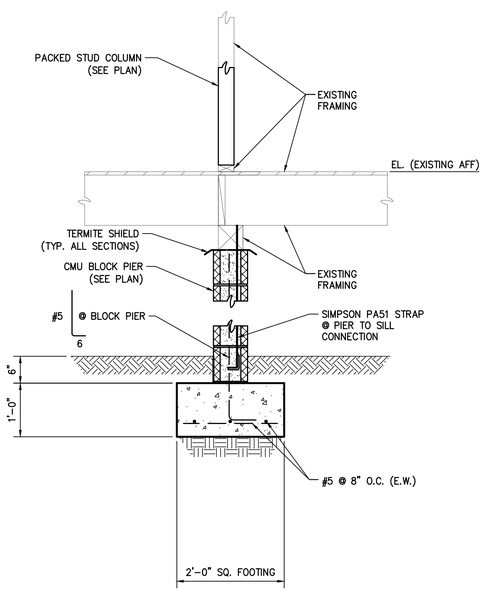

SECTION 3
SCALE: 3/4" = 1'-0" S1.1 S1.3

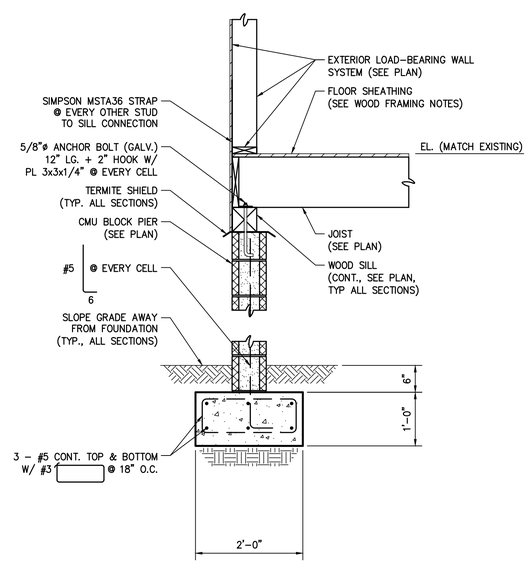

SECTION 4
SCALE: 3/4" = 1'-0" S1.2 S1.3

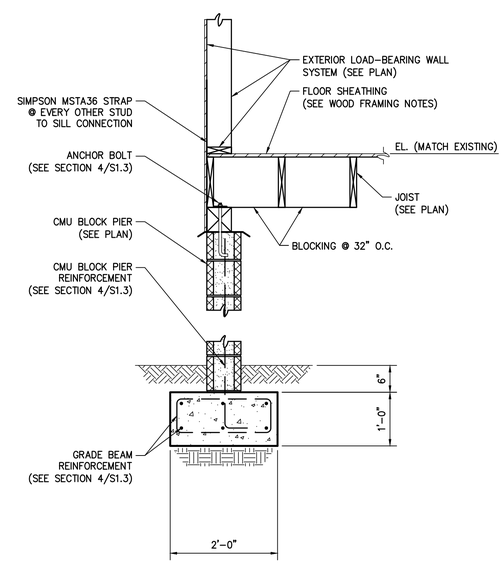

SECTION 5
SCALE: 3/4" = 1'-0" S1.2 S1.3

ADAMICK ARCHITECTURE
3301 CHIPPEWA STREET
NEW ORLEANS, LA 70115
504.322.1220

Project: #2024-19

COOK RESIDENCE RENOVATION & ADDITION

ADDRESS:
1317-1319 ADAMS ST. NEW ORLEANS, LA 70118

FOUNDATION SECTIONS

AXIS ENGINEERING
CIVIL I STRUCTURAL
3500 N. CAUSEWAY BLVD., #650, METAIRIE, LA 70002
504.380.0800 OFFICE - INFO@AXISENGR.COM EMAIL

THESE PLANS HAVE BEEN PREPARED BY ME OR UNDER MY CLOSE PERSONAL SUPERVISION AND TO THE BEST OF MY KNOWLEDGE AND BELIEF, THEY COMPLY WITH ALL LOCAL, REGIONAL AND NATIONAL REQUIREMENTS. I AM NOT OBSERVING THE WORK.

ENGINEER: JAMES B HEASLIP AE PROJECT #: 24123
LICENSE NUMBER: 31593

STATE OF LOUISIANA
JAMES B. HEASLIP II
REG. No. 31593
REGISTERED PROFESSIONAL ENGINEER IN CIVIL ENGINEERING

DATE:	01/13/2025
PROJECT NO.:	2024-19
DRAWING BY:	WMF
CHK BY:	JBH
DWG NO.:	S1.3
CAD FILE NO:	

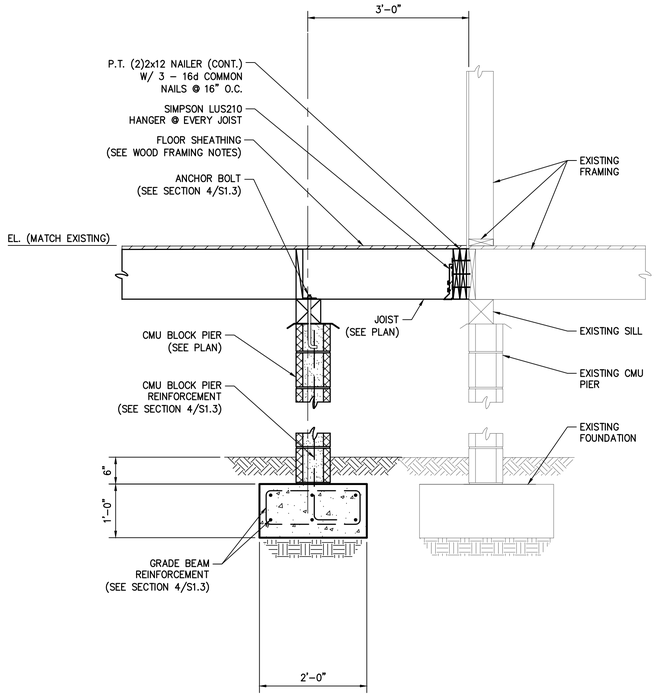

SECTION 6
SCALE: 3/4" = 1'-0" S1.2|S1.4

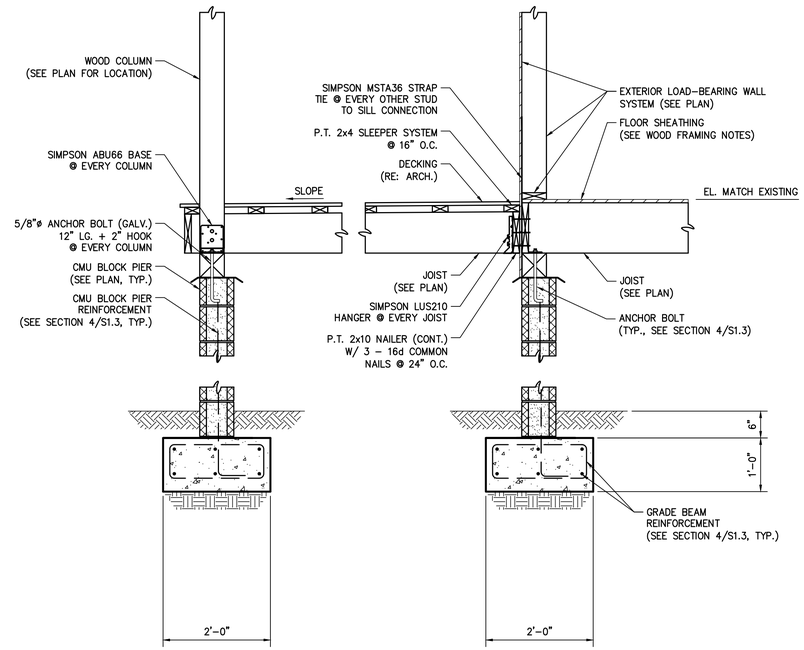

SECTION 7
SCALE: 3/4" = 1'-0" S1.2|S1.4

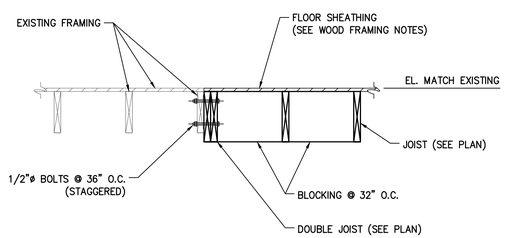

SECTION 8
SCALE: 3/4" = 1'-0" S1.2|S1.4

ADAMICK ARCHITECTURE
3301 CHIPPEWA STREET
NEW ORLEANS, LA 70115
504.322.1220

Project: #2024-19

COOK RESIDENCE RENOVATION & ADDITION

ADDRESS:
1317-1319 ADAMS ST. NEW ORLEANS, LA 70118

FOUNDATION SECTIONS

AXIS ENGINEERING
CIVIL | STRUCTURAL
3500 N. CAUSEWAY BLVD., #650, METAIRIE, LA 70002
504.380.0800 OFFICE - INFO@AXISENGR.COM EMAIL

THESE PLANS HAVE BEEN PREPARED BY ME OR UNDER MY CLOSE PERSONAL SUPERVISION AND TO THE BEST OF MY KNOWLEDGE AND BELIEF, THEY COMPLY WITH ALL LOCAL, REGIONAL AND NATIONAL REQUIREMENTS. I AM NOT OBSERVING THE WORK.

ENGINEER: JAMES B HEASLIP AE PROJECT #: 24123
LICENSE NUMBER: 31593

STATE OF LOUISIANA
JAMES B. HEASLIP II
REG. No. 31593
REGISTERED PROFESSIONAL ENGINEER IN CIVIL ENGINEERING

DATE:	01/13/2025
PROJECT NO.:	2024-19
DRAWING BY:	WMF
CHK BY:	JBH
DWG NO.:	S1.4
CAD FILE NO:	

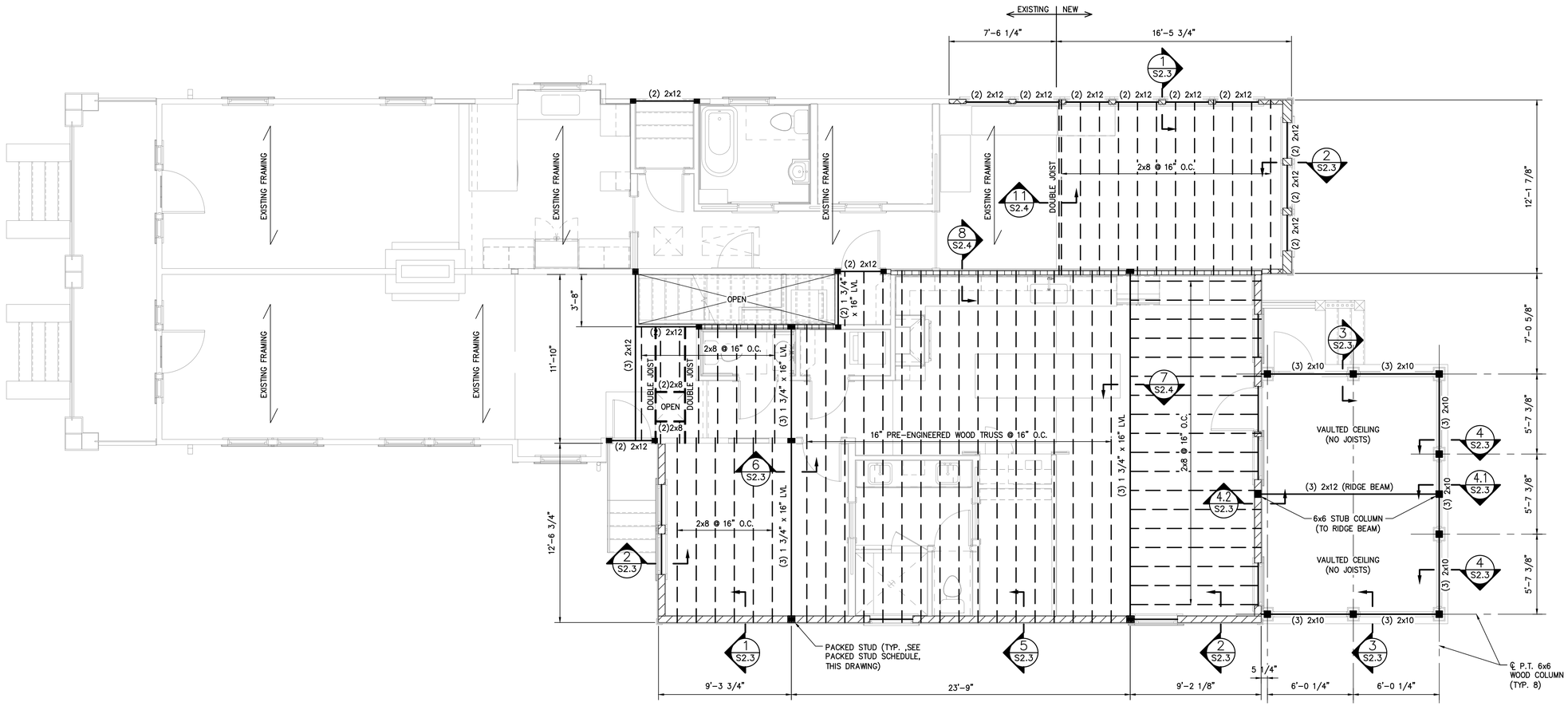

FIRST FLOOR CEILING/SECOND FLOOR FRAMING PLAN

SCALE: 1/4" = 1'-0"

PLAN NOTES:

1. FOR ALL NOTES, SEE DRAWING S1.0A – S1.0B.
2. PRIOR TO CONSTRUCTION, CONTRACTOR TO VERIFY ALL DIMENSIONS AND ELEVATIONS WITH ARCHITECTURAL DRAWINGS.
3. MEASUREMENTS ARE TO EDGE OF FRAMING. SEE ARCHITECTURAL DRAWINGS FOR FINISHED DIMENSIONS.
4. UNLESS SHOWN ON PLANS, SEE WOOD FRAMING NOTES FOR HEADER SIZING.
5. PROVIDE BLOCKING WHERE JOIST SPAN EXCEED 8'–0".
6. – SYMBOL ON PLAN INDICATES 2x6 EXTERIOR LOAD–BEARING WALL SYSTEM:
   - A. 2x6 STUD @ 16" O.C. (MAX.)
   - B. 2x6 BOTTOM PLATE
   - C. DOUBLE 2x6 TOP PLATE
   - D. SHEATHING – SEE WOOD FRAMING NOTES
   - E. BLOCKING @ 48" O.C. (MAX.)
7. – SYMBOL ON PLAN INDICATES 2x4 EXTERIOR LOAD–BEARING WALL SYSTEM:
   - A. 2x4 STUD @ 16" O.C. (MAX.)
   - B. 2x4 BOTTOM PLATE
   - C. DOUBLE 2x4 TOP PLATE
   - D. SHEATHING – SEE WOOD FRAMING NOTES
   - E. BLOCKING @ 48" O.C. (MAX.)
8. – SYMBOL ON PLAN INDICATES 2x8 EXTERIOR LOAD–BEARING WALL SYSTEM:
   - A. 2x8 STUD @ 16" O.C. (MAX.)
   - B. 2x8 BOTTOM PLATE
   - C. DOUBLE 2x8 TOP PLATE
   - D. SHEATHING – SEE WOOD FRAMING NOTES
   - E. BLOCKING @ 48" O.C. (MAX.)
9. – SYMBOL ON PLAN INDICATES 2x4 INTERIOR LOAD–BEARING WALL SYSTEM:
   - A. 2x4 STUD @ 16" O.C. (MAX.)
   - B. 2x4 BOTTOM PLATE
   - C. DOUBLE 2x4 TOP PLATE
   - D. BLOCKING @ 48" O.C. (MAX.)

PACKED STUD SCHEDULE

INTERIOR BEAM COLUMNS		HEADERS IN EXTERIOR WALLS		
BEAM SIZE	MIN. NUMBER OF STUDS REQUIRED (EACH SIDE)	OPENING SIZE	MIN. NUMBER OF JACK STUDS REQUIRED (EACH SIDE)	MIN. NUMBER OF KING STUDS REQUIRED (EACH SIDE)
(2) 2x8 or (2) 2x10 or (2) 2x12	3	0'–0" – 4'–0"	1	2
(3) 2x8 or (3) 2x10 or (3) 2x12	3	4'–1" – 6'–0"	2	2
(2) LVL	3	6'–1" – 8'–0"	2	3
(3) LVL	4	8'–1" – 10'–0"	3	4
(4) LVL	5	10'–1" – 12'–0"	3	5
DOUBLE TRUSS	5	12'–1" – 16'–0"	3	6
		16'–1" – 18'–0"	4	7

NOTES:
1. PACKED STUD IS REQUIRED UNDER EACH BEAM END (UNLESS SHOWN OTHERWISE).
2. ALL PACKED STUDS SHALL BE CARRIED DOWN TO THE FOUNDATION.
3. FULL HEIGHT STUDS ARE REQUIRED FOR PACKED STUD CONSTRUCTION.
4. SEE PACKED STUD DETAIL, DRAWING S2.5.

AXIS ENGINEERING
CIVIL I STRUCTURAL
3500 N. CAUSEWAY BLVD., #650, METAIRIE, LA 70002
504.380.0800 OFFICE - INFO@AXISENGR.COM EMAIL

THESE PLANS HAVE BEEN PREPARED BY ME OR UNDER MY CLOSE PERSONAL SUPERVISION AND TO THE BEST OF MY KNOWLEDGE AND BELIEF, THEY COMPLY WITH ALL LOCAL, REGIONAL AND NATIONAL REQUIREMENTS. I AM NOT OBSERVING THE WORK.

ENGINEER: JAMES B HEASLIP AE PROJECT #: 24123
LICENSE NUMBER: 31593

STATE OF LOUISIANA
JAMES B. HEASLIP II
REG. No. 31593
REGISTERED PROFESSIONAL ENGINEER IN CIVIL ENGINEERING

ADAMICK ARCHITECTURE
3301 CHIPPEWA STREET
NEW ORLEANS, LA 70115
504.322.1220

Project: #2024-19

COOK RESIDENCE RENOVATION & ADDITION

ADDRESS:
1317-1319 ADAMS ST. NEW ORLEANS, LA 70118

SECOND FLOOR FRAMING PLAN

DATE:	01/13/2025
PROJECT NO.:	2024-19
DRAWING BY:	WMF
CHK BY:	JBH
DWG NO.:	S2.0
CAD FILE NO:	

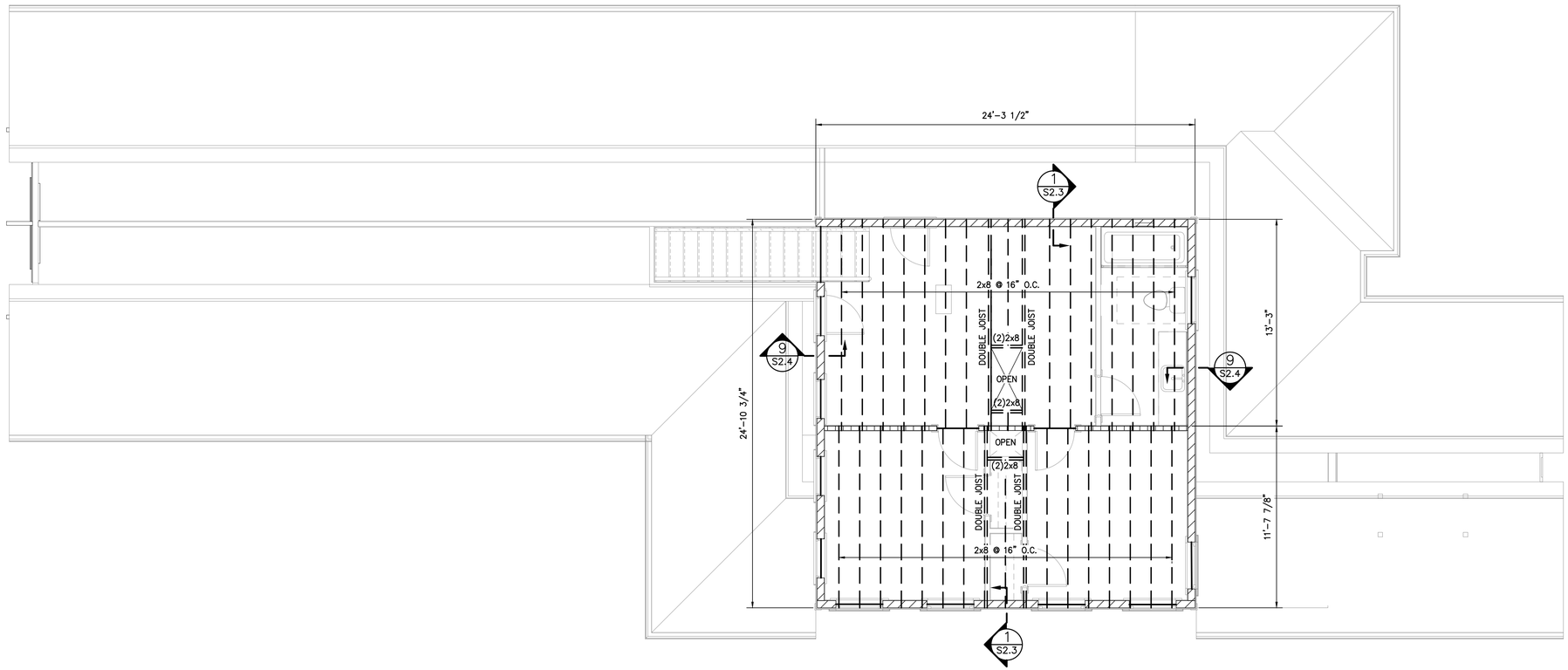

SECOND FLOOR CEILING FRAMING PLAN

SCALE: 1/4" = 1'-0"

PLAN NOTES:

1. FOR ALL NOTES, SEE DRAWINGS S1.0A – S1.0B.
2. FOR ALL PLAN NOTES, SEE DRAWING S2.0.

ADAMICK ARCHITECTURE
3301 CHIPPEWA STREET
NEW ORLEANS, LA 70115
504.322.1220

Project: #2024-19

COOK RESIDENCE RENOVATION & ADDITION

ADDRESS:
1317-1319 ADAMS ST. NEW ORLEANS, LA 70118

SECOND FLOOR CEILING PLAN

AXIS ENGINEERING
CIVIL | STRUCTURAL
3500 N. CAUSEWAY BLVD., #650, METAIRIE, LA 70002
504.380.0800 OFFICE - INFO@AXISENGR.COM EMAIL

THESE PLANS HAVE BEEN PREPARED BY ME OR UNDER MY CLOSE PERSONAL SUPERVISION AND TO THE BEST OF MY KNOWLEDGE AND BELIEF, THEY COMPLY WITH ALL LOCAL, REGIONAL AND NATIONAL REQUIREMENTS. I AM NOT OBSERVING THE WORK.

ENGINEER: JAMES B HEASLIP AE PROJECT #:24123
LICENSE NUMBER: 31593

STATE OF LOUISIANA
JAMES B. HEASLIP II
REG. No. 31593
REGISTERED PROFESSIONAL ENGINEER IN
CIVIL ENGINEERING

DATE:	01/13/2025
PROJECT NO.:	2024-19
DRAWING BY:	WMF
CHK BY:	JBH
DWG NO.:	S2.1
CAD FILE NO:	

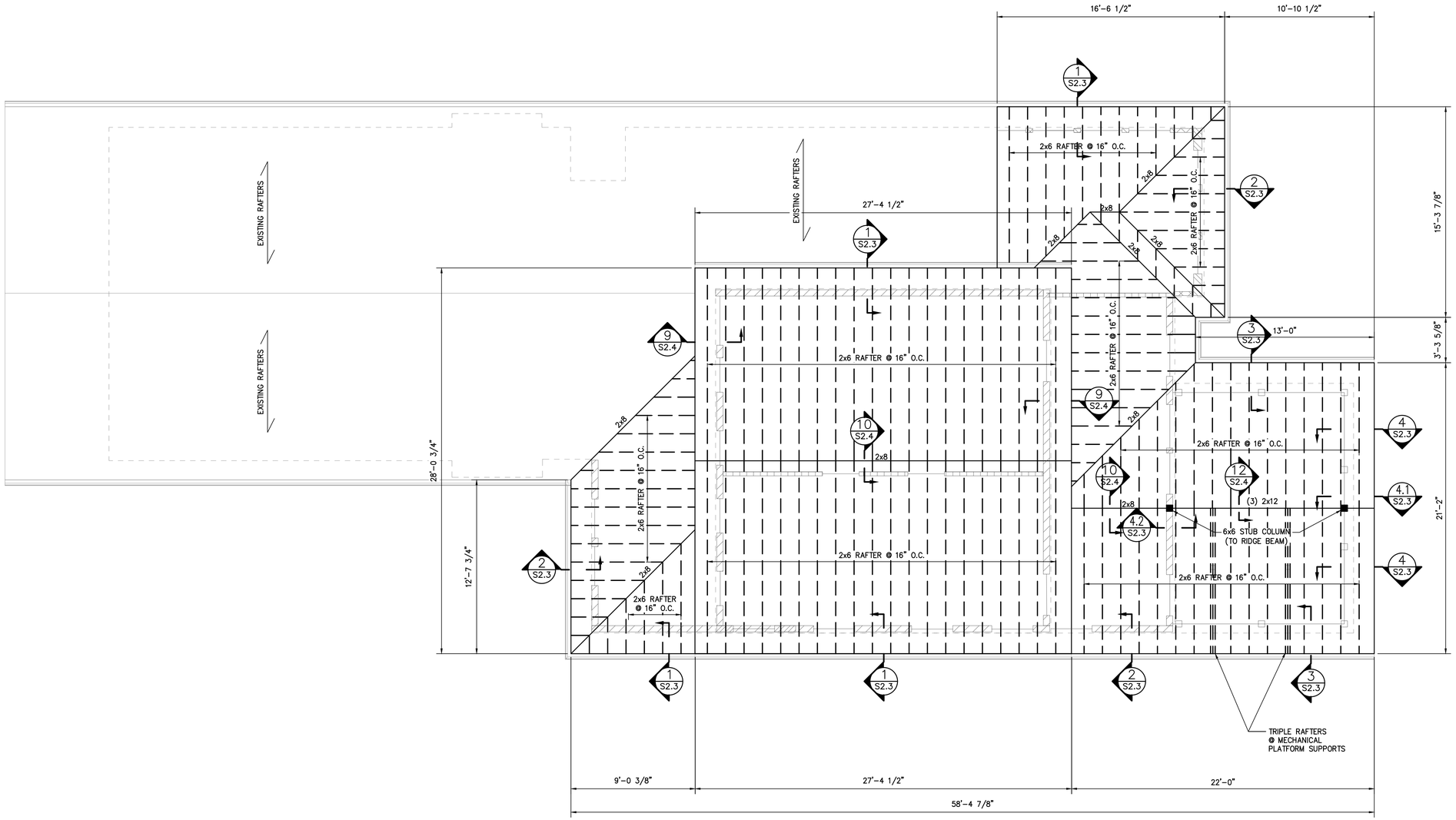

ROOF FRAMING PLAN

SCALE: 1/4" = 1'-0"

PLAN NOTES:

1. FOR ALL NOTES, SEE DRAWINGS S1.0A – S1.0B.
2. FOR ALL PLAN NOTES, SEE DRAWING S2.0.

AXIS ENGINEERING
CIVIL I STRUCTURAL
3500 N. CAUSEWAY BLVD., #650, METAIRIE, LA 70002
504.380.0800 OFFICE - INFO@AXISENGR.COM EMAIL

THESE PLANS HAVE BEEN PREPARED BY ME OR UNDER MY CLOSE PERSONAL SUPERVISION AND TO THE BEST OF MY KNOWLEDGE AND BELIEF, THEY COMPLY WITH ALL LOCAL, REGIONAL AND NATIONAL REQUIREMENTS. I AM NOT OBSERVING THE WORK.

ENGINEER: JAMES B HEASLIP AE PROJECT #:24123
LICENSE NUMBER: 31593

ADAMICK ARCHITECTURE
3301 CHIPPEWA STREET
NEW ORLEANS, LA 70115
504.322.1220

Project: #2024-19

COOK RESIDENCE RENOVATION & ADDITION

ADDRESS:
1317-1319 ADAMS ST. NEW ORLEANS, LA 70118

ROOF FRAMING PLAN

STATE OF LOUISIANA
JAMES B. HEASLIP II
REG. No. 31593
REGISTERED PROFESSIONAL ENGINEER IN CIVIL ENGINEERING

DATE:	01/13/2025
PROJECT NO.:	2024-19
DRAWING BY:	WMF
CHK BY:	JBH
DWG NO.:	S2.2
CAD FILE NO:	

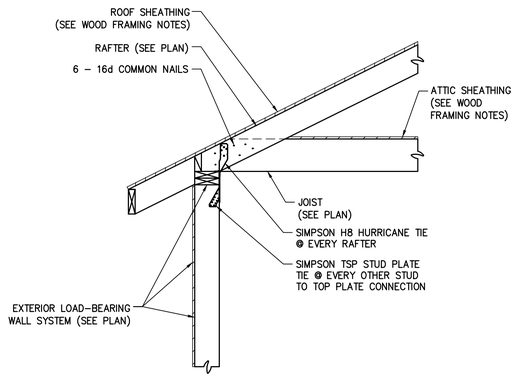

SECTION 1
SCALE: 3/4" = 1'–0" S2.0|S2.3

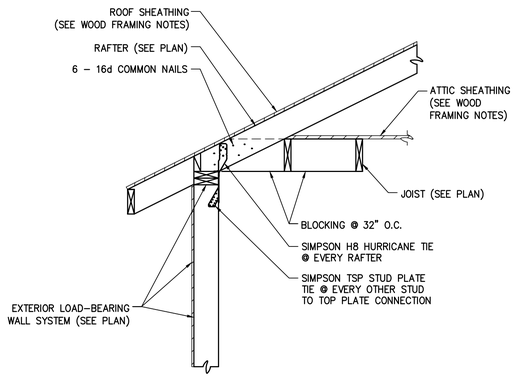

SECTION 2
SCALE: 3/4" = 1'–0" S2.0|S2.3

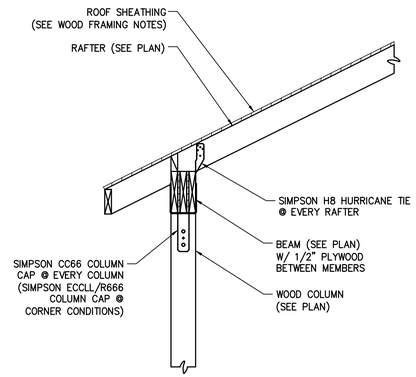

SECTION 3
SCALE: 3/4" = 1'–0" S2.0|S2.3

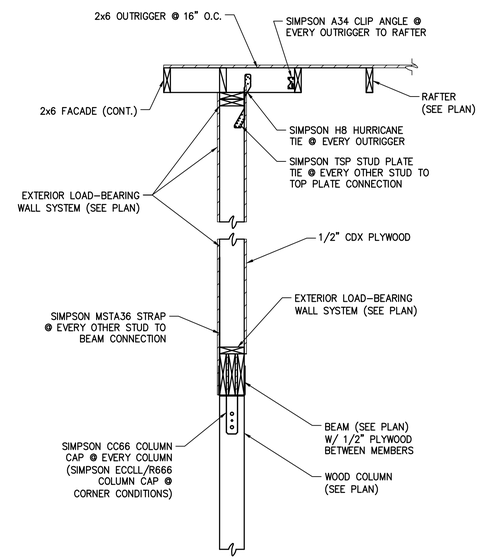

SECTION 4
SCALE: 3/4" = 1'–0" S2.0|S2.3

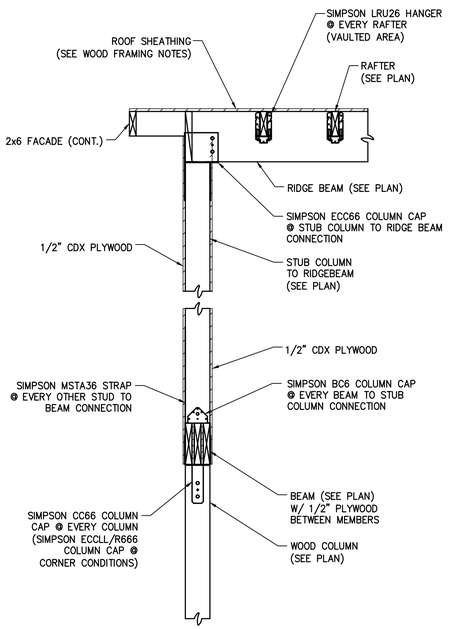

SECTION 4.1
SCALE: 3/4" = 1'–0" S2.0|S2.3

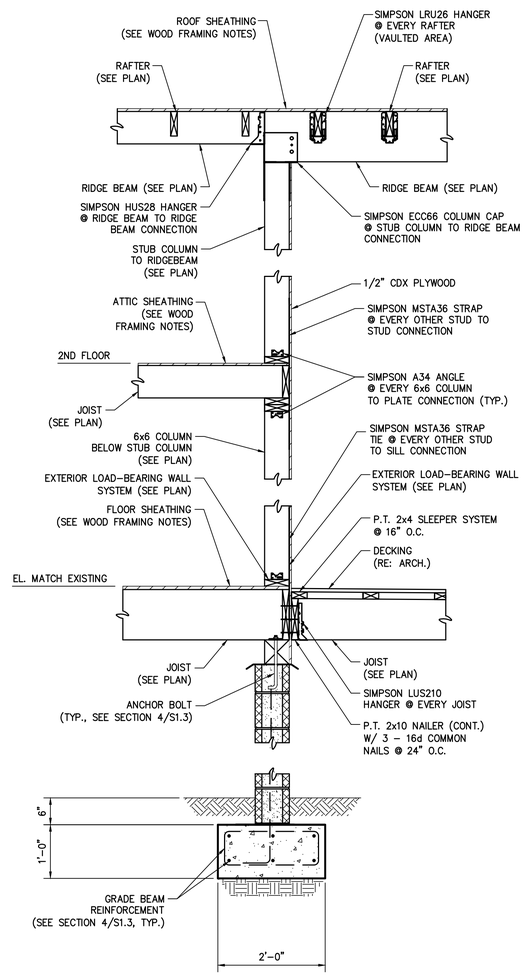

SECTION 4.2
SCALE: 3/4" = 1'–0" S2.0|S2.3

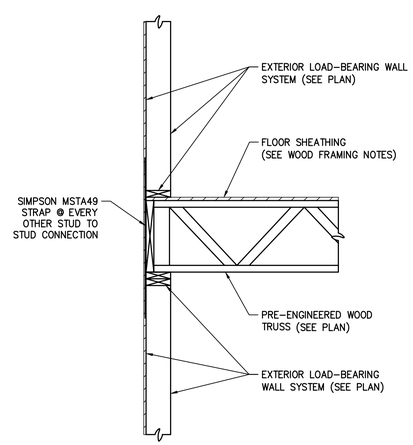

SECTION 5
SCALE: 3/4" = 1'–0" S2.0|S2.3

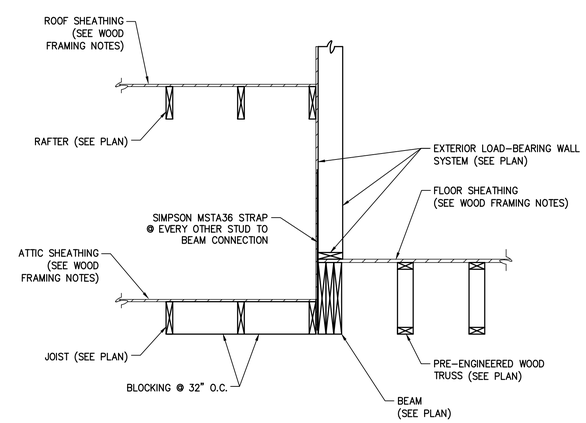

SECTION 6
SCALE: 3/4" = 1'–0" S2.0

ADAMICK ARCHITECTURE
3301 CHIPPEWA STREET
NEW ORLEANS, LA 70115
504.322.1220

Project: #2024-19

COOK RESIDENCE RENOVATION & ADDITION

ADDRESS:
1317-1319 ADAMS ST. NEW ORLEANS, LA 70118

FRAMING SECTIONS

AXIS ENGINEERING
CIVIL I STRUCTURAL
3500 N. CAUSEWAY BLVD., #650, METAIRIE, LA 70002
504.380.0800 OFFICE - INFO@AXISENGR.COM EMAIL

THESE PLANS HAVE BEEN PREPARED BY ME OR UNDER MY CLOSE PERSONAL SUPERVISION AND TO THE BEST OF MY KNOWLEDGE AND BELIEF, THEY COMPLY WITH ALL LOCAL, REGIONAL AND NATIONAL REQUIREMENTS. I AM NOT OBSERVING THE WORK.

ENGINEER: JAMES B HEASLIP AE PROJECT #: 24123
LICENSE NUMBER: 31593

STATE OF LOUISIANA
JAMES B. HEASLIP II
REG. No. 31593
REGISTERED PROFESSIONAL ENGINEER IN CIVIL ENGINEERING

DATE:	01/13/2025
PROJECT NO.:	2024-19
DRAWING BY:	WMF
CHK BY:	JBH
DWG NO.:	S2.3
CAD FILE NO:	

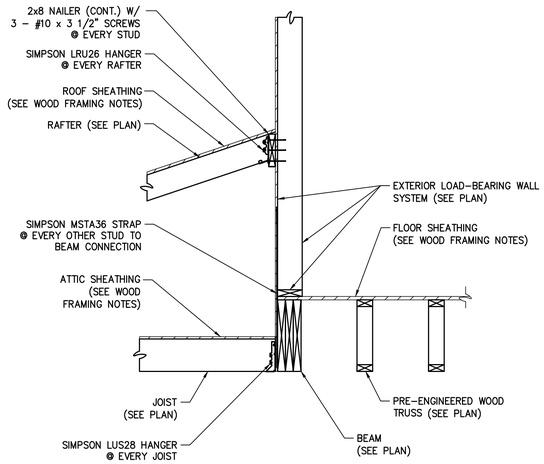

SECTION 7
SCALE: 3/4" = 1'–0" S2.0|S2.4

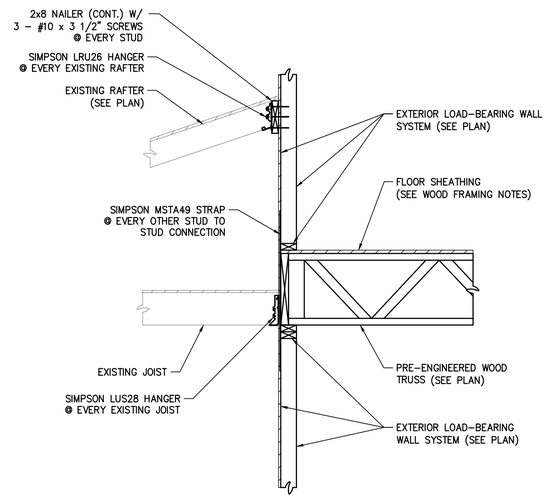

SECTION 8
SCALE: 3/4" = 1'–0" S2.0|S2.4

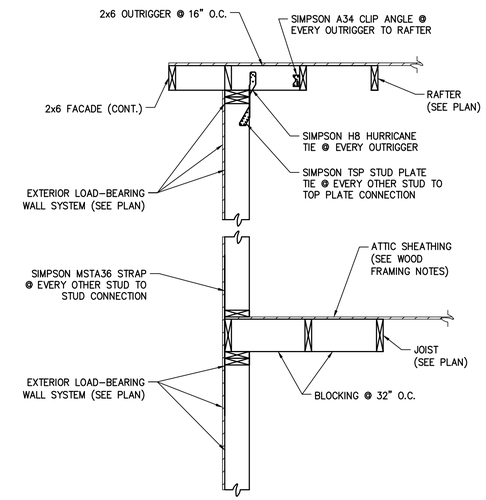

SECTION 9
SCALE: 3/4" = 1'–0" S2.1|S2.4

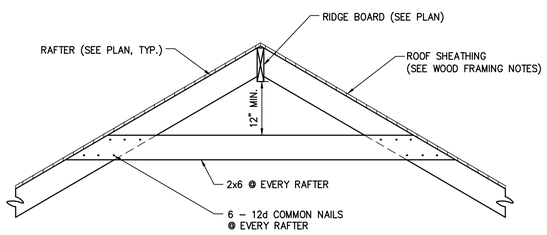

SECTION 10
SCALE: 3/4" = 1'–0" S2.2|S2.4

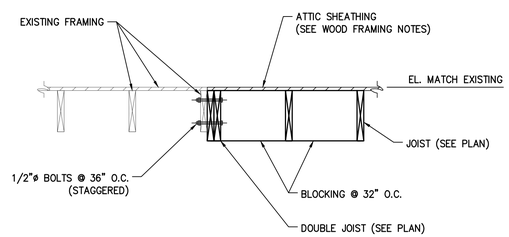

SECTION 11
SCALE: 3/4" = 1'–0" S2.0|S2.4

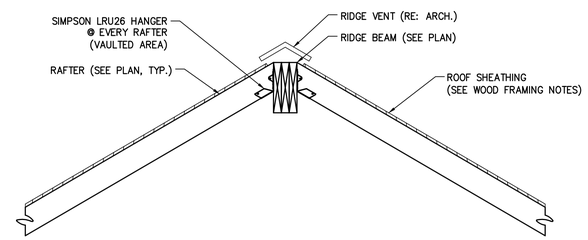

SECTION 12
SCALE: 3/4" = 1'–0" S2.2|S2.4

ADAMICK ARCHITECTURE
3301 CHIPPEWA STREET
NEW ORLEANS, LA 70115
504.322.1220

Project: #2024-19

COOK RESIDENCE RENOVATION & ADDITION

ADDRESS:
1317-1319 ADAMS ST. NEW ORLEANS, LA 70118

FRAMING SECTIONS

AXIS ENGINEERING
CIVIL | STRUCTURAL
3500 N. CAUSEWAY BLVD., #650, METAIRIE, LA 70002
504.380.0800 OFFICE - INFO@AXISENGR.COM EMAIL

THESE PLANS HAVE BEEN PREPARED BY ME OR UNDER MY CLOSE PERSONAL SUPERVISION AND TO THE BEST OF MY KNOWLEDGE AND BELIEF, THEY COMPLY WITH ALL LOCAL, REGIONAL AND NATIONAL REQUIREMENTS. I AM NOT OBSERVING THE WORK.

ENGINEER: JAMES B HEASLIP AE PROJECT #: 24123
LICENSE NUMBER: 31593

STATE OF LOUISIANA
JAMES B. HEASLIP II
REG. No. 31593
REGISTERED
PROFESSIONAL ENGINEER
IN
CIVIL ENGINEERING

DATE:	01/13/2025
PROJECT NO.:	2024-19
DRAWING BY:	WMF
CHK BY:	JBH
DWG NO.:	S2.4
CAD FILE NO:	

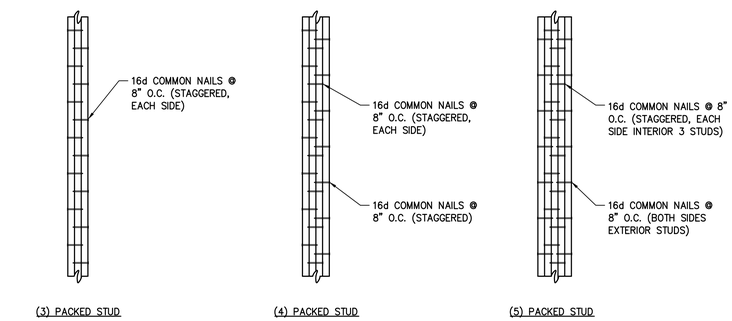

PACKED STUD DETAIL

SCALE: N.T.S.

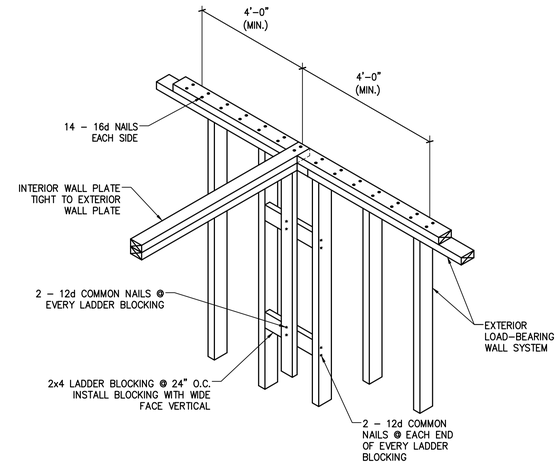

INTERIOR WALL INTERSECTION DETAIL

SCALE: N.T.S.

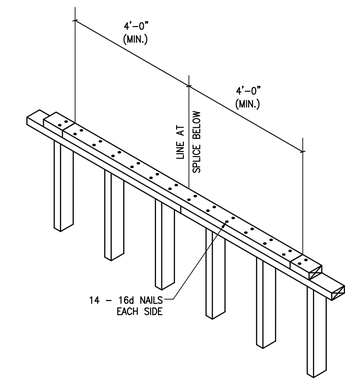

TOP PLATE SPLICE DETAIL

SCALE: N.T.S.

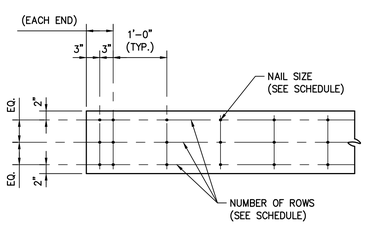

BEAM AND HEADER MEMBER SIZE	NUMBER OF ROWS	NAIL SIZE (COMMON NAIL)
(2) 2x8	2	12d
(2) 2x10	2	12d
(2) 2x12	2	12d
(3) 2x8	3	16d
(3) 2x10	3	16d
(3) 2x12	3	16d
(3) 1 3/4" x 16" LVL	3	16d

NOTE:

ALL BEAM AND HEADER MEMBERS TO BE PROPERLY SHORED BY CONTRACTOR PRIOR TO NAILING MEMBERS TOGETHER.

BEAM AND HEADER FASTENING PATTERN DETAIL

SCALE: N.T.S.

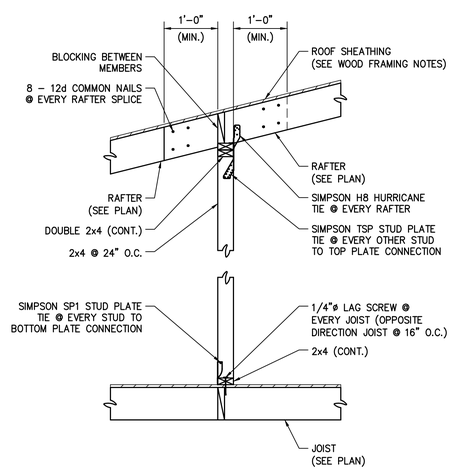

TYPICAL KNEE WALL SECTION (RAFTER SPANS GREATER THAN 12'-0")

SCALE: 3/4" = 1'-0"

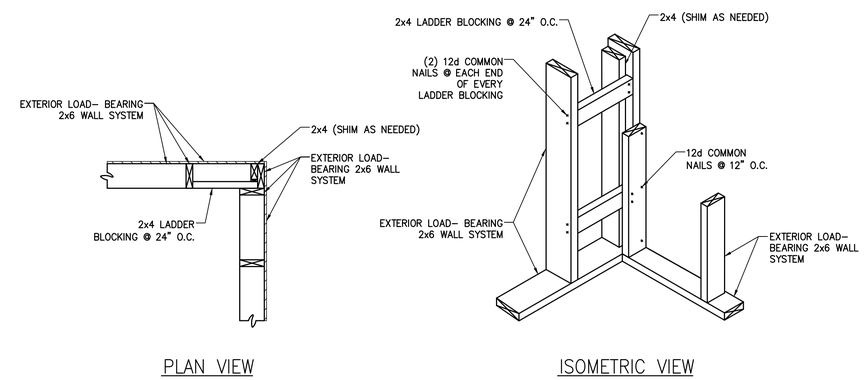

PLAN VIEW

ISOMETRIC VIEW

TYPICAL THREE-STUD CORNER DETAIL

SCALE: N.T.S.

ADAMICK ARCHITECTURE
3301 CHIPPEWA STREET
NEW ORLEANS, LA 70115
504.322.1220

Project: #2024-19

COOK RESIDENCE RENOVATION & ADDITION

ADDRESS:
1317-1319 ADAMS ST. NEW ORLEANS, LA 70118

FRAMING DETAILS

AXIS ENGINEERING
CIVIL I STRUCTURAL
3500 N. CAUSEWAY BLVD., #650, METAIRIE, LA 70002
504.380.0800 OFFICE - INFO@AXISENGR.COM EMAIL

THESE PLANS HAVE BEEN PREPARED BY ME OR UNDER MY CLOSE PERSONAL SUPERVISION AND TO THE BEST OF MY KNOWLEDGE AND BELIEF, THEY COMPLY WITH ALL LOCAL, REGIONAL AND NATIONAL REQUIREMENTS. I AM NOT OBSERVING THE WORK.

ENGINEER: JAMES B HEASLIP AE PROJECT #: 24123
LICENSE NUMBER: 31593

STATE OF LOUISIANA
JAMES B. HEASLIP II
REG. No. 31593
REGISTERED PROFESSIONAL ENGINEER IN
CIVIL ENGINEERING

DATE:	01/13/2025
PROJECT NO.:	2024-19
DRAWING BY:	WMF
CHK BY:	JBH
DWG NO.:	S2.5
CAD FILE NO:	

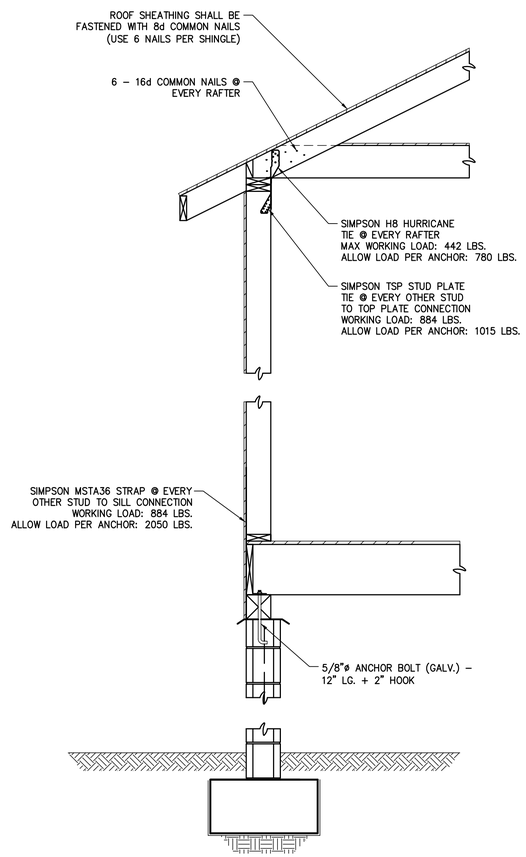

HURRICANE STRAPPING DIAGRAM

SCALE: 3/4" = 1'–0"

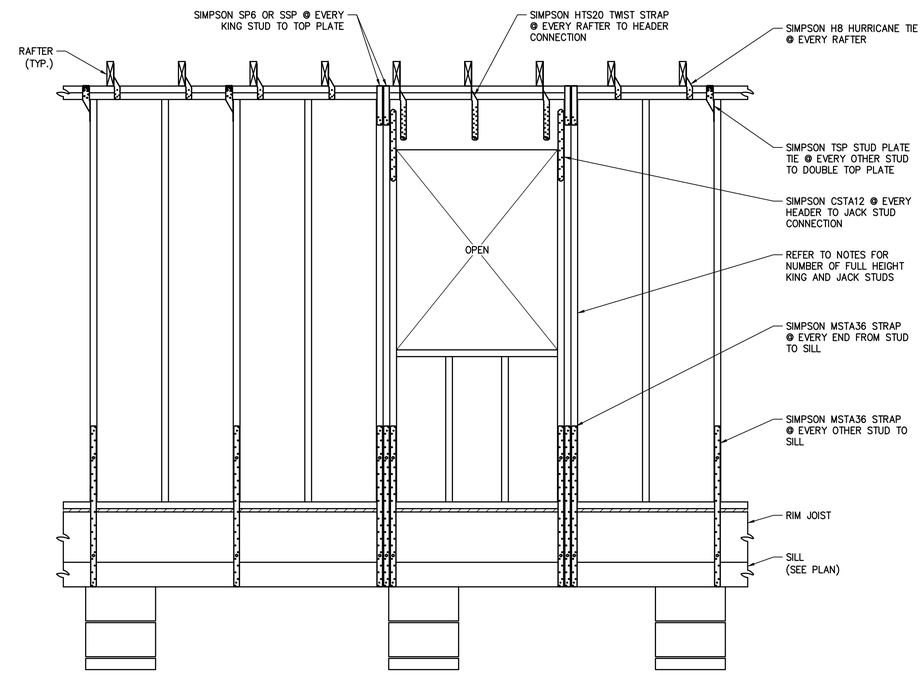

CONTINUOUS LOAD PATH @ OPENINGS

SCALE: 3/4" = 1'–0"

ADAMICK ARCHITECTURE
3301 CHIPPEWA STREET
NEW ORLEANS, LA 70115
504.322.1220

Project: #2024-19

COOK RESIDENCE RENOVATION & ADDITION

ADDRESS:
1317-1319 ADAMS ST. NEW ORLEANS, LA 70118

FRAMING DETAILS

AXIS ENGINEERING
CIVIL I STRUCTURAL
3500 N. CAUSEWAY BLVD., #650, METAIRIE, LA 70002
504.380.0800 OFFICE - INFO@AXISENGR.COM EMAIL

THESE PLANS HAVE BEEN PREPARED BY ME OR UNDER MY CLOSE PERSONAL SUPERVISION AND TO THE BEST OF MY KNOWLEDGE AND BELIEF, THEY COMPLY WITH ALL LOCAL, REGIONAL AND NATIONAL REQUIREMENTS. I AM NOT OBSERVING THE WORK.

ENGINEER: JAMES B HEASLIP AE PROJECT #: 24123
LICENSE NUMBER: 31593

STATE OF LOUISIANA
JAMES B. HEASLIP II
REG. No. 31593
REGISTERED PROFESSIONAL ENGINEER IN CIVIL ENGINEERING

DATE:	01/13/2025
PROJECT NO.:	2024-19
DRAWING BY:	WMF
CHK BY:	JBH
DWG NO.:	S2.6
CAD FILE NO:	

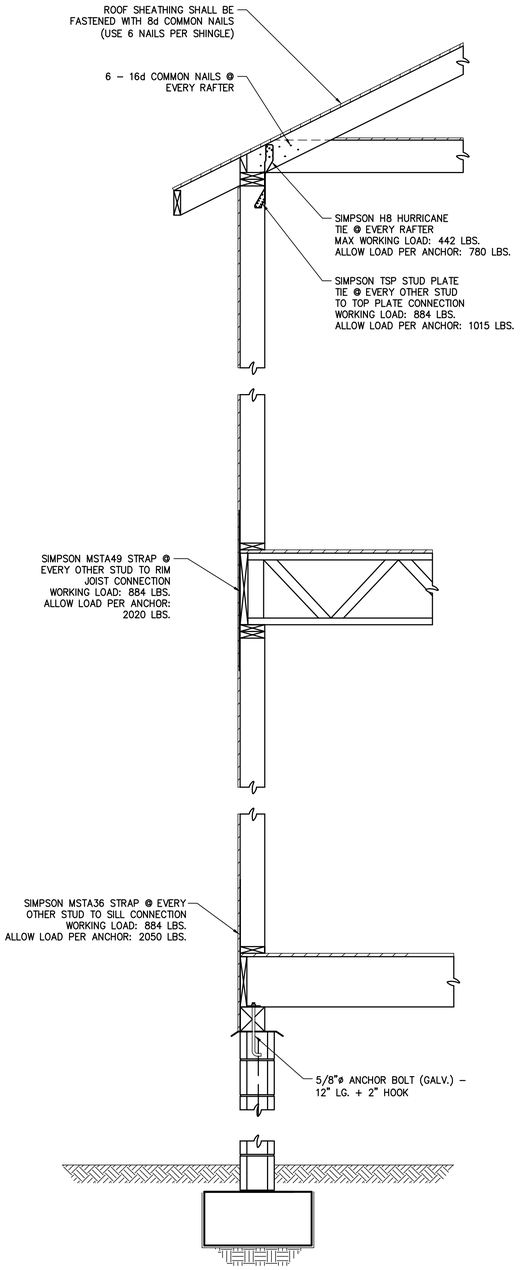

HURRICANE STRAPPING DIAGRAM

SCALE: 3/4" = 1'-0"

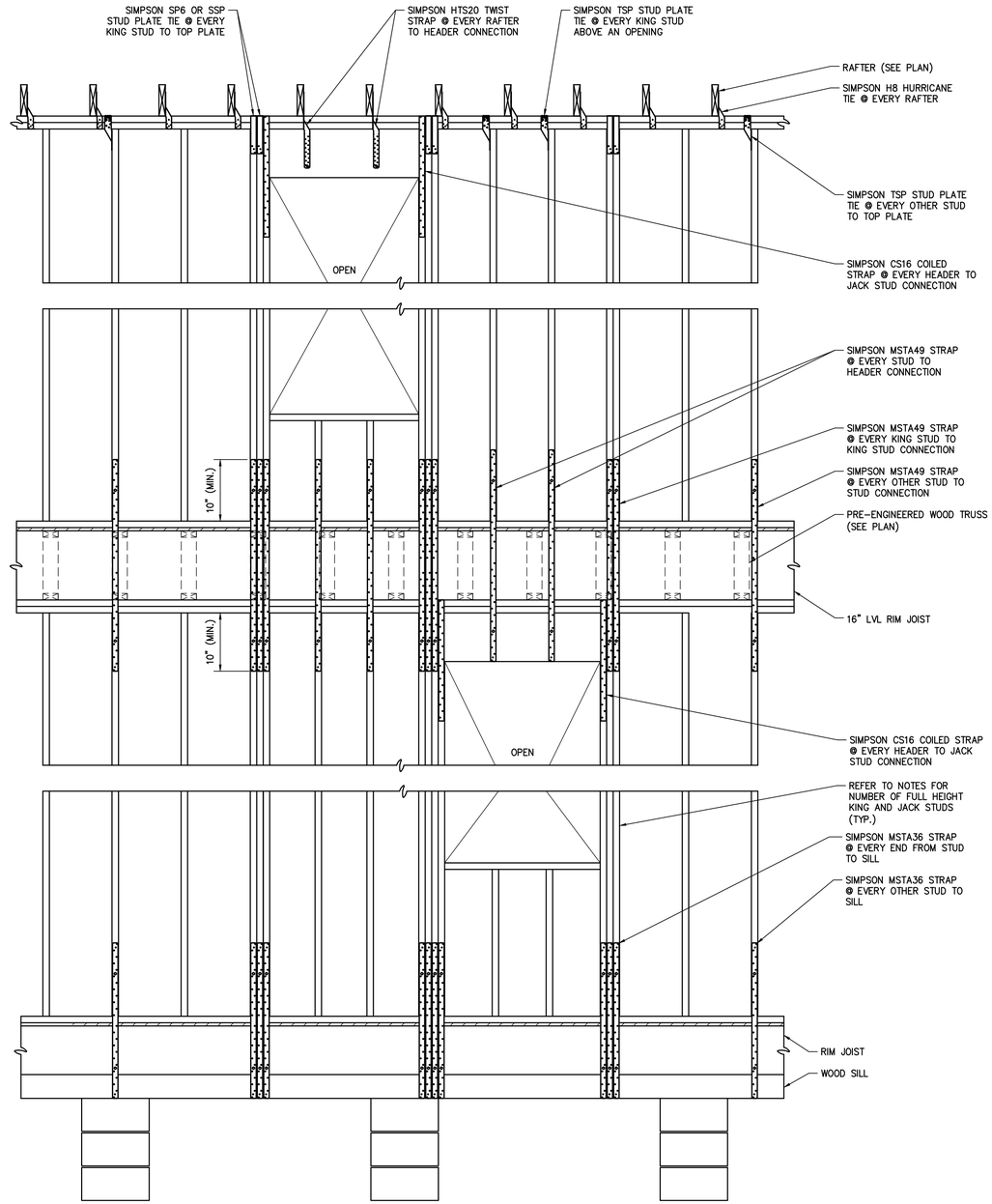

CONTINUOUS LOAD PATH @ TWO-STORY STACKED AND OFFSET OPENINGS

SCALE: N.T.S.

ADAMICK ARCHITECTURE
3301 CHIPPEWA STREET
NEW ORLEANS, LA 70115
504.322.1220

Project: #2024-19

COOK RESIDENCE RENOVATION & ADDITION

ADDRESS:
1317-1319 ADAMS ST. NEW ORLEANS, LA 70118

FRAMING DETAILS

AXIS ENGINEERING
CIVIL I STRUCTURAL
3500 N. CAUSEWAY BLVD., #650, METAIRIE, LA 70002
504.380.0800 OFFICE - INFO@AXISENGR.COM EMAIL

THESE PLANS HAVE BEEN PREPARED BY ME OR UNDER MY CLOSE PERSONAL SUPERVISION AND TO THE BEST OF MY KNOWLEDGE AND BELIEF, THEY COMPLY WITH ALL LOCAL, REGIONAL AND NATIONAL REQUIREMENTS. I AM NOT OBSERVING THE WORK.

ENGINEER: JAMES B HEASLIP AE PROJECT #: 24123

LICENSE NUMBER: 31593

STATE OF LOUISIANA
JAMES B. HEASLIP II
REG. No. 31593
REGISTERED PROFESSIONAL ENGINEER IN
CIVIL ENGINEERING

DATE:	01/13/2025
PROJECT NO.:	2024-19
DRAWING BY:	WMF
CHK BY:	JBH
DWG NO.:	S2.7
CAD FILE NO:	

LEGEND: EXISTING & DEMOLITION PLAN

EXISTING WALL

DEMO WALL

EXISTING DOOR

DEMO DOOR

2 TERMITE DAMAGE
1" = 1'-0"

SHEET - KEYNOTES	
Key Value	Keynote Text
D-01	HATCH INDICATES AREA OF DEMO, TYP.; PROVIDE SHORING WHERE REQ.
D-02	RETAIN EXIST. FIREPLACE; PROVIDE PROTECTION THROUGHOUT CONSTRUCTION.
D-03	RETAIN EXIST. PICTURE RAIL THIS ROOM; PROVIDE PROTECTION THROUGHOUT CONSTRUCTION. PATCH AS REQ.
D-04	GC TO EXAMINE & REPAIR EXTENTS OF TERMITE DAMAGE SHOW IN PHOTOS 2/D101 AT THIS LOCATION.
D-05	REMOVE FLAT WORK AT THIS LOCATION; TYP. PER HATCH.
D-06	DEMO SHED ROOF OVER FLAT WORK. PATCH SHED AS REQ.
D-07	WATERLINE TO SHED AT HANDRAIL, CAUTION DURING DEMO.
D-09	REMOVE EXIST. WALL AT THIS LOCATION. SHORE AS REQ.
D-10	REMOVE EXIST. WALL AREA FOR NEW WINDOW/DOOR, TYP. PER HATCH; RE. PROP. ARCH.
D-11	REMOVE EXIST. WINDOW AT THIS LOCATION; TYP. PER HATCH.
D-12	REMOVE DOUBLE WINDOW AT THIS LOCATION & REHANG 1'-0" TOWARDS FRONT ELEVATION.
D-13	REMOVE & SALVAGE EXIST. DOUBLE WINDOW FOR REUSE. RE. A101 FOR NEW LOCATION; TYP. PER TAG.
D-14	REMOVE & SALVAGE EXIST. WINDOW AT THIS LOCATION FOR REUSE. RE. A101 FOR NEW LOCATION; TYP. PER TAG.
D-15	REMOVE EXIST. DOOR AT THIS LOCATION; TYP. PER HATCH.
D-16	REMOVE & SALVAGE CRAFTSMAN DOOR PANEL FOR REUSE. RE. A101 FOR NEW LOCATION; TYP. PER TAG.
D-17	REMOVE EXIST. FLOOR TILE AT THIS ROOM.
D-18	REMOVE EXIST. BEADBOARD CLG. AT THIS ROOM.
D-19	REMOVE EXIST. COUNTERTOP AT THIS LOCATION.
D-20	REMOVE EXIST. PLUMBING FIXTURES AT THIS LOCATION.
D-21	REMOVE & SALVAGE CLAW FOOT TUB AT THIS LOCATION FOR REUSE IN ROOM #006.
D-22	REMOVE & SALVAGE PLUMBING FIXTURE AT THIS LOCATION. SAVE FOR REVIEW BY OWNER.
D-23	REMOVE & SALVAGE CABINET MILLWORK AT THIS LOCATION FOR REUSE. RE. A101 FOR NEW LOCATION.
D-23.01	REMOVE & SALVAGE HAMPER MILLWORK AT THIS LOCATION FOR REUSE. RE. A101 FOR NEW LOCATION.
D-24	REMOVE & SALVAGE HISTORIC MILLWORK AT THIS LOCATION. SAVE FOR REVIEW BY OWNER.
D-28	DEMOLISH FLOOR & FRAMING FOR NEW SIDE ENTRY PER HATCH.
D-29	REMOVE EXIST. STAIR AT THIS LOCATION.
D-30	REMOVE EXIST. DUCTWORK ON FROM 1309 ADAMS ST NEIGHBOR THAT EXTENDS OVER PROPERTY LINE. COORD. W/ OWNER & NEIGHBOR PRIOR TO REMOVAL.

GENERAL DEMOLITION NOTES

1. CONTRACTOR SHALL VERIFY EXISTING CONDITIONS PRIOR TO BEGINNING DEMOLITION AND REPORT DISCREPANCIES IN EXISTING CONDITIONS DRAWINGS TO ARCHITECT.
2. CONTRACTOR SHALL PROVIDE TEMPORARY SHORING & BRACING, TO ENSURE PLUMBNESS, STABILITY AND SAFETY, WHENEVER REQUIRED TO SUPPORT LOADS THAT MAY BE IMPOSED ON THE STRUCTURE DURING DEMOLITION AND CONSTRUCTION.
3. CONTRACTOR SHALL BE RESPONSIBLE FOR ANY DAMAGE TO THE BUILDING & OBJECTS OUTSIDE THE DEMO SCOPE DUE TO DEMOLITION.
4. CONTRACTOR SHALL REMOVE FROM BUILDING SITE ALL DEBRIS, RUBBISH AND OTHER MATERIALS RESULTING FROM DEMOLITION.
5. CONTRACTOR SHALL REMOVE EXISTING ELECTRICAL WORK AS NOTED OR REQUIRED BY PROPOSED CONSTRUCTION. CONTRACTOR SHALL REMOVE ALL DEFICIENT, ABANDONED, AND EXISTING ELECTRICAL NOT UP TO CODE.
6. CONTRACTOR SHALL REMOVE ALL EXISTING PLUMBING LINES & BRANCHES AS NOTED OR REQUIRED BY PROPOSED CONSTRUCTION. CONTRACTOR SHALL REMOVE ALL DEFICIENT, ABANDONED, AND EXISTING PLUMBING NOT UP TO CODE.
7. CONTRACTOR SHALL PREPARE BUILDING AS REQUIRED FOR PROPOSED HVAC WORK. ADDITIONAL SELECTIVE DEMOLITION MAY BE REQUIRED DURING CONSTRUCTION. CONTRACTOR SHALL REMOVE ALL DEFICIENT, ABANDONED, AND EXISTING HVAC EQUIPMENT & DUCTWORK NOT UP TO CODE.
8. CONTRACTOR SHALL REMOVE ALL EXISTING ACCESSORIES, LIGHT FIXTURES, PLUMBING FIXTURES AND APPLIANCES (UNLESS OTHERWISE NOTED. SAVE FOR REVIEW BY OWNER.
9. ALL REMOVED DOORS, WINDOWS, AND ASSOCIATED HARDWARE AS NOTED BY THE PLANS TO BE REVIEWED BY OWNER PRIOR TO DISPOSAL.
10. CONTRACTOR SHALL DONATE ALL MATERIALS, DOORS, WINDOWS, APPLIANCES, CABINETS, VANITIES, HISTORICAL DETAILS DESIGNATED FOR REMOVAL TO THE NON-PROFIT SALVAGE BUILDING : SUPPLY STORE, 'THE GREEN PROJECT'. CONTRACTOR SHALL ARRANGE PICK-UP OF MATERIALS DIRECTLY WITH A 'GREEN PROJECT' REPRESENTATIVE & PROVIDE RECEIPT TO CLIENT. ANY ITEMS DONATED WITHOUT OWNER CONSENT, SHALL BE REPLACED & INSTALLED BY CONTRACTOR AT NO COST TO OWNER.
11. SAVE DEMOLISHED TRIMWORK FOR REVIEW BY OWNER
12. ALL EXTERIOR SIDING & TRIM TO BE REMOVED UNLESS CALLED OUT OTHERWISE PREPARE FOR NEW HARDIE SIDING.

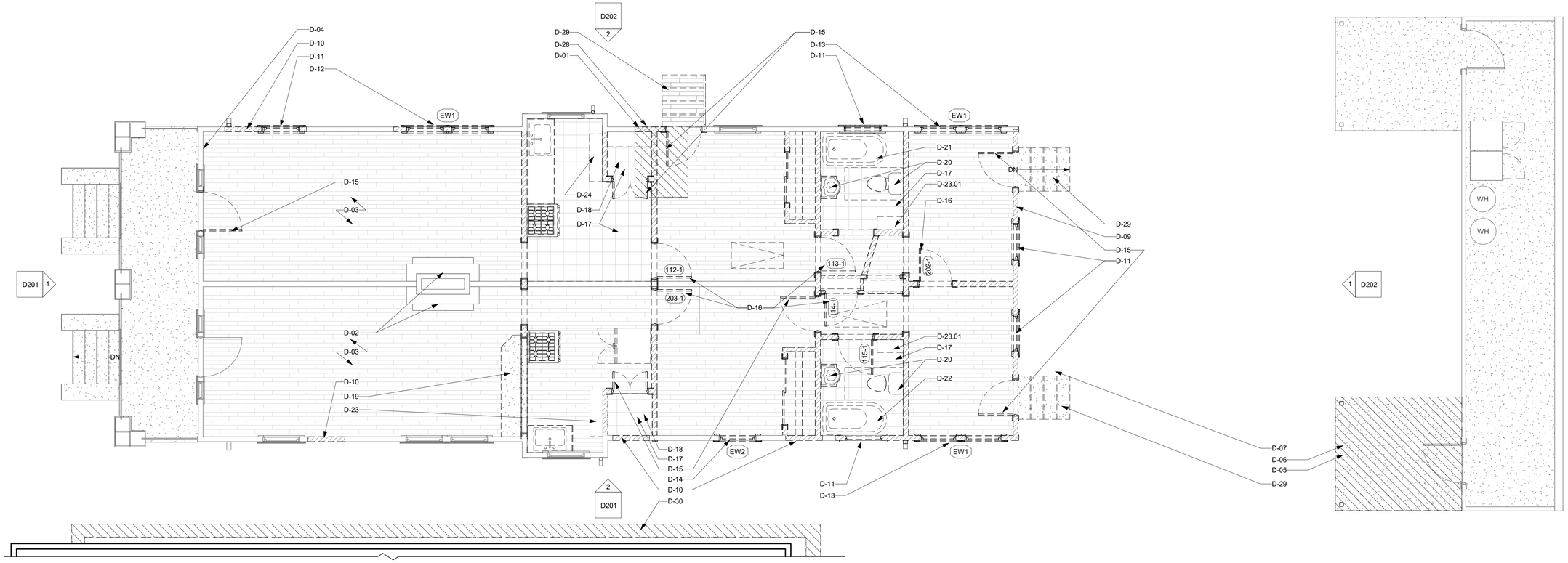

1 DEMOLITION PLAN - FIRST FLOOR
1/4" = 1'-0"

ADAMICK ARCHITECTURE
3301 CHIPPEWA STREET
NEW ORLEANS, LA 70115
504.322.1220

No.	Description	Date

20 DEC. 2024	CD-100%
16 DEC. 2024	CD-85%
18 NOV. 2024	CD-75%
28 OCT. 2024	DD-3
18 SEP. 2024	DD-2
06 SEP. 2024	DD-1
20 AUG. 2024	SD-3
30 JUL. 2024	SD-2
11 JUL. 2024	SD-1
20 JUN. 2024	EC-1

Project: #2024-19

COOK RESIDENCE RENOVATION & ADDITION

ADDRESS:
1317-1319 ADAMS ST. NEW ORLEANS, LA 70118

EXISTING / DEMO FIRST FLOOR PLAN & NOTES

ALEXANDER JAMES ADAMICK
REG. NO. 8148
STATE OF LOUISIANA
REGISTERED ARCHITECT

DATE:	2/12/2025 12:53:32 PM
PROJECT NO.:	2024-19
DRAWING BY:	XXX
CHECKED BY:	AJA
SHEET NO.:	D101
CAD FILE NO: 2024-19\PDF OUT\EC	18/39

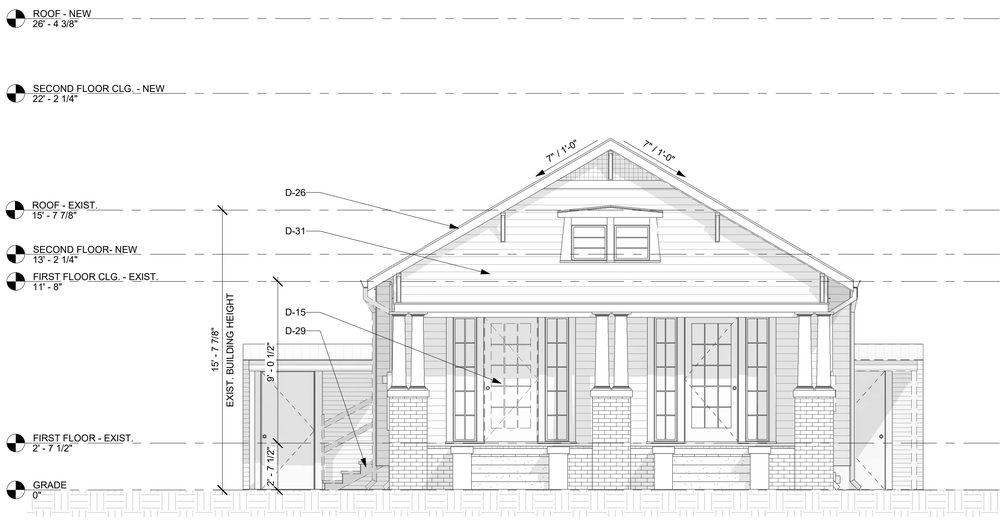

1 PROPOSED DEMOLITION OF THE FRONT ELEVATION
1/4" = 1'-0"

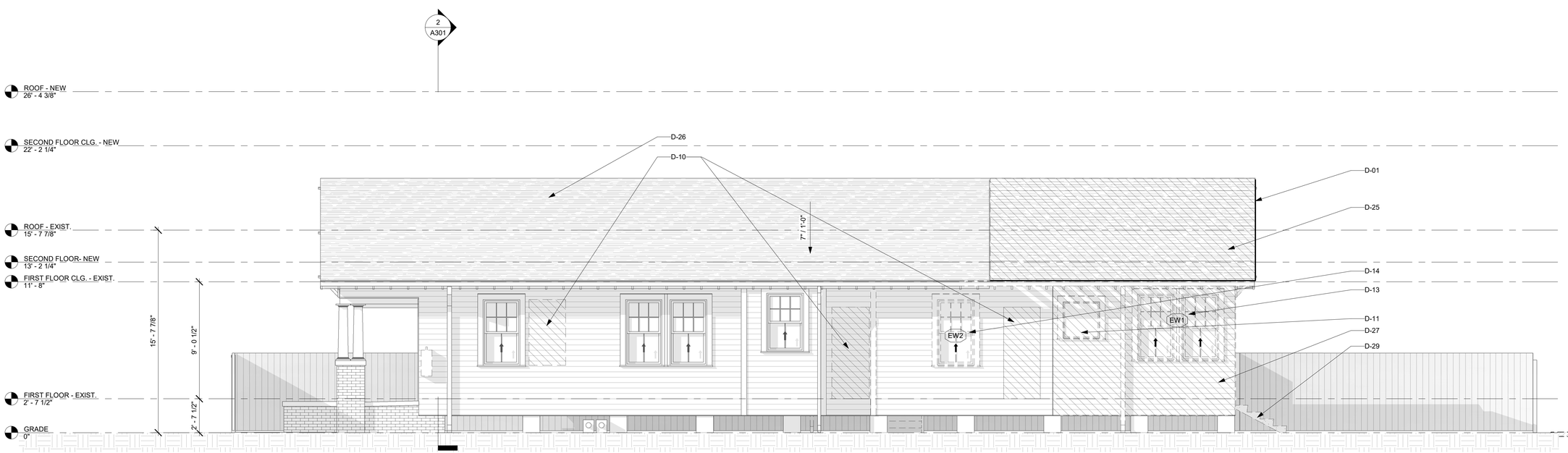

2 PROPOSED DEMOLITION OF THE RIGHT SIDE ELEVATION
1/4" = 1'-0"

SHEET - KEYNOTES	
Key Value	Keynote Text
D-01	HATCH INDICATES AREA OF DEMO, TYP.; PROVIDE SHORING WHERE REQ.
D-10	REMOVE EXIST. WALL AREA FOR NEW WINDOW/DOOR, TYP. PER HATCH; RE. PROP. ARCH.
D-11	REMOVE EXIST. WINDOW AT THIS LOCATION; TYP. PER HATCH.
D-13	REMOVE & SALVAGE EXIST. DOUBLE WINDOW FOR REUSE. RE. A101 FOR NEW LOCATION; TYP. PER TAG.
D-14	REMOVE & SALVAGE EXIST. WINDOW AT THIS LOCATION FOR REUSE. RE. A101 FOR NEW LOCATION; TYP. PER TAG.
D-15	REMOVE EXIST. DOOR AT THIS LOCATION; TYP. PER HATCH.
D-25	REMOVE EXIST. ROOF FINISH, ROOF FRAMING, GUTTERS, & D.S. AS REQ.; RE. PROPOSED PLANS.
D-26	REMOVE EXIST. ROOF FINISH, GUTTERS, & D.S.; EXIST. STRUCTURE TO REMAIN.
D-27	REMOVE EXIST. SIDING & TRIM, TYP. PER HATCH.
D-29	REMOVE EXIST. STAIR AT THIS LOCATION.
D-31	EXIST. SIDING & TRIM TO REMAIN; FRONT ELEVATION ONLY. PATCH & REPAIR SIDING & TRIM AS REQ.

GENERAL DEMOLITION NOTES

1. CONTRACTOR SHALL VERIFY EXISTING CONDITIONS PRIOR TO BEGINNING DEMOLITION AND REPORT DISCREPANCIES IN EXISTING CONDITIONS DRAWINGS TO ARCHITECT.
2. CONTRACTOR SHALL PROVIDE TEMPORARY SHORING & BRACING, TO ENSURE PLUMBNESS, STABILITY AND SAFETY, WHENEVER REQUIRED TO SUPPORT LOADS THAT MAY BE IMPOSED ON THE STRUCTURE DURING DEMOLITION AND CONSTRUCTION.
3. CONTRACTOR SHALL BE RESPONSIBLE FOR ANY DAMAGE TO THE BUILDING & OBJECTS OUTSIDE THE DEMO SCOPE DUE TO DEMOLITION.
4. CONTRACTOR SHALL REMOVE FROM BUILDING SITE ALL DEBRIS, RUBBISH AND OTHER MATERIALS RESULTING FROM DEMOLITION.
5. CONTRACTOR SHALL REMOVE EXISTING ELECTRICAL WORK AS NOTED OR REQUIRED BY PROPOSED CONSTRUCTION. CONTRACTOR SHALL REMOVE ALL DEFICIENT, ABANDONED, AND EXISTING ELECTRICAL NOT UP TO CODE.
6. CONTRACTOR SHALL REMOVE ALL EXISTING PLUMBING LINES & BRANCHES AS NOTED OR REQUIRED BY PROPOSED CONSTRUCTION. CONTRACTOR SHALL REMOVE ALL DEFICIENT, ABANDONED, AND EXISTING PLUMBING NOT UP TO CODE.
7. CONTRACTOR SHALL PREPARE BUILDING AS REQUIRED FOR PROPOSED HVAC WORK. ADDITIONAL SELECTIVE DEMOLITION MAY BE REQUIRED DURING CONSTRUCTION. CONTRACTOR SHALL REMOVE ALL DEFICIENT, ABANDONED, AND EXISTING HVAC EQUIPMENT & DUCTWORK NOT UP TO CODE.
8. CONTRACTOR SHALL REMOVE ALL EXISTING ACCESSORIES, LIGHT FIXTURES, PLUMBING FIXTURES AND APPLIANCES (UNLESS OTHERWISE NOTED. SAVE FOR REVIEW BY OWNER.
9. ALL REMOVED DOORS, WINDOWS, AND ASSOCIATED HARDWARE AS NOTED BY THE PLANS TO BE REVIEWED BY OWNER PRIOR TO DISPOSAL.
10. CONTRACTOR SHALL DONATE ALL MATERIALS, DOORS, WINDOWS, APPLIANCES, CABINETS, VANITIES, HISTORICAL DETAILS DESIGNATED FOR REMOVAL TO THE NON-PROFIT SALVAGE BUILDING SUPPLY STORE, 'THE GREEN PROJECT'. CONTRACTOR SHALL ARRANGE PICK-UP OF MATERIALS DIRECTLY WITH A 'GREEN PROJECT' REPRESENTATIVE & PROVIDE RECEIPT TO CLIENT. ANY ITEMS DONATED WITHOUT OWNER CONSENT, SHALL BE REPLACED & INSTALLED BY CONTRACTOR AT NO COST TO OWNER.
11. SAVE DEMOLISHED TRIMWORK FOR REVIEW BY OWNER
12. ALL EXTERIOR SIDING & TRIM TO BE REMOVED UNLESS CALLED OUT OTHERWISE PREPARE FOR NEW HARDIE SIDING.

ADAMICK ARCHITECTURE
3301 CHIPPEWA STREET
NEW ORLEANS, LA 70115
504.322.1220

No.	Description	Date

20 DEC. 2024	CD-100%
16 DEC. 2024	CD-85%
18 NOV. 2024	CD-75%
28 OCT. 2024	DD-3
18 SEP. 2024	DD-2
06 SEP. 2024	DD-1
20 AUG. 2024	SD-3
30 JUL. 2024	SD-2
11 JUL. 2024	SD-1
20 JUN. 2024	EC-1

Project: #2024-19

COOK RESIDENCE RENOVATION & ADDITION

ADDRESS:
1317-1319 ADAMS ST. NEW ORLEANS, LA 70118

EXISTING / DEMO EXTERIOR ELEVATIONS & NOTES

ALEXANDER JAMES ADAMICK
REG. NO. 8148
STATE OF LOUISIANA
REGISTERED ARCHITECT

DATE:	2/12/2025 12:53:38 PM
PROJECT NO.:	2024-19
DRAWING BY:	XXX
CHECKED BY:	AJA
SHEET NO.:	D201
CAD FILE NO: 2024-19\PDF OUT\EC	19/39

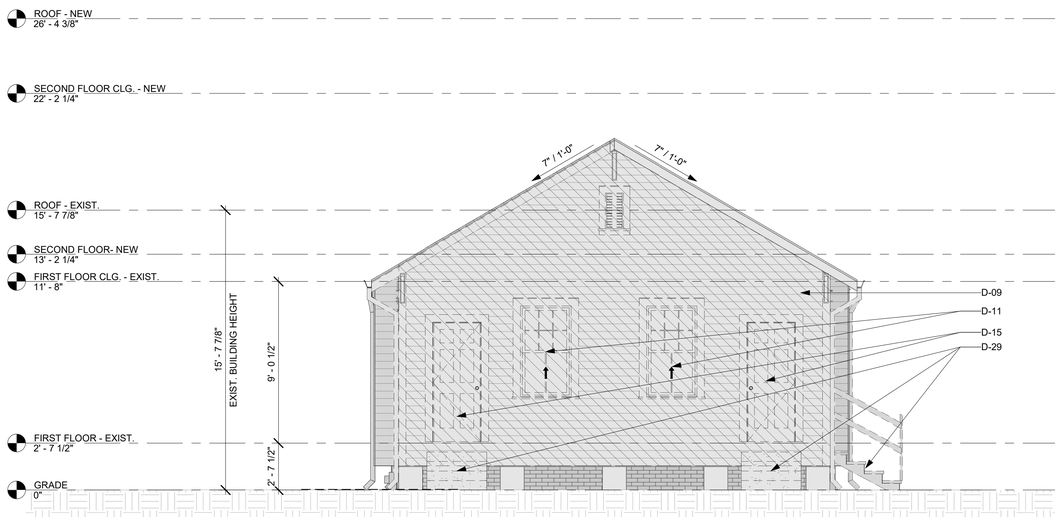

1 PROPOSED DEMOLITION OF THE REAR ELEVATION
1/4" = 1'-0"

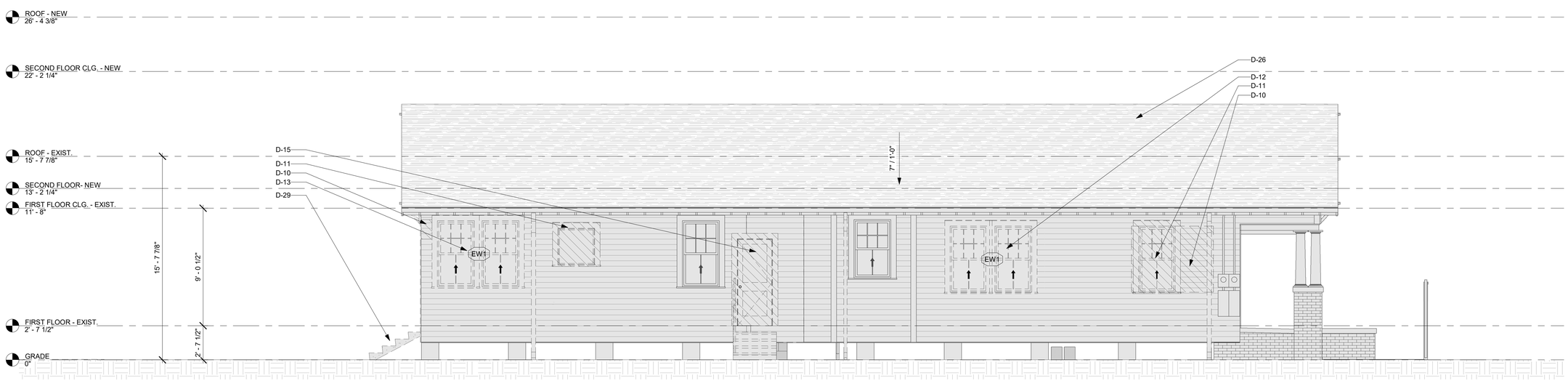

2 PROPOSED DEMOLITION OF THE LEFT SIDE ELEVATION
1/4" = 1'-0"

SHEET - KEYNOTES	
Key Value	Keynote Text
D-09	REMOVE EXIST. WALL AT THIS LOCATION. SHORE AS REQ.
D-10	REMOVE EXIST. WALL AREA FOR NEW WINDOW/DOOR, TYP. PER HATCH; RE. PROP. ARCH.
D-11	REMOVE EXIST. WINDOW AT THIS LOCATION; TYP. PER HATCH.
D-12	REMOVE DOUBLE WINDOW AT THIS LOCATION & REHANG 1'-0" TOWARDS FRONT ELEVATION.
D-13	REMOVE & SALVAGE EXIST. DOUBLE WINDOW FOR REUSE. RE. A101 FOR NEW LOCATION; TYP. PER TAG.
D-15	REMOVE EXIST. DOOR AT THIS LOCATION; TYP. PER HATCH.
D-26	REMOVE EXIST. ROOF FINISH, GUTTERS, & D.S.; EXIST. STRUCTURE TO REMAIN.
D-29	REMOVE EXIST. STAIR AT THIS LOCATION.

GENERAL DEMOLITION NOTES

1. CONTRACTOR SHALL VERIFY EXISTING CONDITIONS PRIOR TO BEGINNING DEMOLITION AND REPORT DISCREPANCIES IN EXISTING CONDITIONS DRAWINGS TO ARCHITECT.
2. CONTRACTOR SHALL PROVIDE TEMPORARY SHORING & BRACING, TO ENSURE PLUMBNESS, STABILITY AND SAFETY, WHENEVER REQUIRED TO SUPPORT LOADS THAT MAY BE IMPOSED ON THE STRUCTURE DURING DEMOLITION AND CONSTRUCTION.
3. CONTRACTOR SHALL BE RESPONSIBLE FOR ANY DAMAGE TO THE BUILDING & OBJECTS OUTSIDE THE DEMO SCOPE DUE TO DEMOLITION.
4. CONTRACTOR SHALL REMOVE FROM BUILDING SITE ALL DEBRIS, RUBBISH AND OTHER MATERIALS RESULTING FROM DEMOLITION.
5. CONTRACTOR SHALL REMOVE EXISTING ELECTRICAL WORK AS NOTED OR REQUIRED BY PROPOSED CONSTRUCTION. CONTRACTOR SHALL REMOVE ALL DEFICIENT, ABANDONED, AND EXISTING ELECTRICAL NOT UP TO CODE.
6. CONTRACTOR SHALL REMOVE ALL EXISTING PLUMBING LINES & BRANCHES AS NOTED OR REQUIRED BY PROPOSED CONSTRUCTION. CONTRACTOR SHALL REMOVE ALL DEFICIENT, ABANDONED, AND EXISTING PLUMBING NOT UP TO CODE.
7. CONTRACTOR SHALL PREPARE BUILDING AS REQUIRED FOR PROPOSED HVAC WORK. ADDITIONAL SELECTIVE DEMOLITION MAY BE REQUIRED DURING CONSTRUCTION. CONTRACTOR SHALL REMOVE ALL DEFICIENT, ABANDONED, AND EXISTING HVAC EQUIPMENT & DUCTWORK NOT UP TO CODE.
8. CONTRACTOR SHALL REMOVE ALL EXISTING ACCESSORIES, LIGHT FIXTURES, PLUMBING FIXTURES AND APPLIANCES (UNLESS OTHERWISE NOTED. SAVE FOR REVIEW BY OWNER.
9. ALL REMOVED DOORS, WINDOWS, AND ASSOCIATED HARDWARE AS NOTED BY THE PLANS TO BE REVIEWED BY OWNER PRIOR TO DISPOSAL.
10. CONTRACTOR SHALL DONATE ALL MATERIALS, DOORS, WINDOWS, APPLIANCES, CABINETS, VANITIES, HISTORICAL DETAILS DESIGNATED FOR REMOVAL TO THE NON-PROFIT SALVAGE BUILDING SUPPLY STORE, 'THE GREEN PROJECT'. CONTRACTOR SHALL ARRANGE PICK-UP OF MATERIALS DIRECTLY WITH A 'GREEN PROJECT' REPRESENTATIVE & PROVIDE RECEIPT TO CLIENT. ANY ITEMS DONATED WITHOUT OWNER CONSENT, SHALL BE REPLACED & INSTALLED BY CONTRACTOR AT NO COST TO OWNER.
11. SAVE DEMOLISHED TRIMWORK FOR REVIEW BY OWNER
12. ALL EXTERIOR SIDING & TRIM TO BE REMOVED UNLESS CALLED OUT OTHERWISE PREPARE FOR NEW HARDIE SIDING.

ADAMICK ARCHITECTURE
3301 CHIPPEWA STREET
NEW ORLEANS, LA 70115
504.322.1220

No.	Description	Date

20 DEC. 2024	CD-100%
16 DEC. 2024	CD-85%
18 NOV. 2024	CD-75%
28 OCT. 2024	DD-3
18 SEP. 2024	DD-2
06 SEP. 2024	DD-1
20 AUG. 2024	SD-3
30 JUL. 2024	SD-2
11 JUL. 2024	SD-1
20 JUN. 2024	EC-1

Project: #2024-19

COOK RESIDENCE RENOVATION & ADDITION

ADDRESS:
1317-1319 ADAMS ST. NEW ORLEANS, LA 70118

EXISTING / DEMO EXTERIOR ELEVATIONS & NOTES

ALEXANDER JAMES ADAMICK
REG. NO. 8148
STATE OF LOUISIANA
REGISTERED ARCHITECT

DATE:	2/12/2025 12:53:45 PM
PROJECT NO.:	2024-19
DRAWING BY:	ADB/ICF
CHECKED BY:	AJA
SHEET NO.:	D202
CAD FILE NO: 2024-19\PDF OUT\EC	20/39

LEGEND: CONSTRUCTION PLAN

- EXISTING WALL
- NEW WALL
- NEW DOOR
- EXISTING DOOR
- NEW THRESHOLD

SHEET - KEYNOTES	
Key Value	Keynote Text
N-20	NEW LOCATION FOR SALVAGE CLAW FOOT TUB. REFINISH AS REQ.
N-21	DASHED LINE INDICATES NEW 1-HR RATED WALL, TYP. PER TAG; RE. WALL SCHED.
N-21.01	HATCH INDICATES 1-HR RATED CLG. USE TWO LAYERS OF 5/8" TYPE 'X' GYP.
N-22	NEW GYP. BOARD FINISH AT EXIST. EXT. WALL.
N-23	NEW CONC. DECK WITH CONC. TREADS AT STAIR AT THIS LOCATION. SLOPED TO DRAIN (1/4 OVER 1' MIN.); RE. STRUC. & DTL 3/A502
N-24	NEW AERATIS HERITAGE T&G DECKING ATOP PTL SLEEPERS W/ AERATIS TREADS AT STAIR AT THIS LOCATION. SLOPED TO DRAIN (1/4 OVER 1' MIN.); RE. STRUC. & DTL 3/A501
N-25	NEW 3'-0" TALL METAL HANDRAIL W/ METAL PILASTERS AND BALUSTERS, TYP.; RE. DTL 4/A502
N-25.01	NEW 3'-0" TALL WALL MOUNTED METAL HANDRAIL.
N-26	NEW 3'-0" PTL PAINTED HANDRAIL W/ PTL PAINTED PILASTERS AND BALUSTERS, TYP.; RE. DTL 5/A502
N-27	RE. ROOM SCHED. FOR FLOOR MATERIAL & FINISH THROUGHOUT.
N-28	RE. DOOR SCHED. FOR TYPE; TYP. PER TAG
N-29	RE. WINDOW SCHED. FOR TYPE; TYP. PER TAG
N-30	NEW LOCATION FOR SALVAGED WINDOW. RE. D101 FOR ORIGINAL LOCATION; TYP. PER TAG.
N-31	NEW LOCATION FOR SALVAGED DOUBLE WINDOW. RE. D101 FOR ORIGINAL LOCATION; TYP. PER TAG.
N-32	NEW LOCATION FOR SALVAGED DOOR PANEL. RE. D101 FOR ORIGINAL LOCATION; TYP. PER TAG.
N-33	NEW CONCEALED GYP. DOOR AT THIS LOCATION. RE. SCHED.
N-33.01	NEW CONCEALED BEADBOARD DOUBLE DOOR AT THIS LOCATION. RE. ID.
N-34	SALVAGED HEAVY DOOR FROM CLIENT. PROVIDE HARDWARE.
N-35	NEW PARTIAL HEIGHT WALL; RE. WALL SCHED. & ID.

SHEET - KEYNOTES	
Key Value	Keynote Text
N-36	PROVIDE WALL BLOCKING AT SHOWER & TOILET FOR ADA GRAB BARS, TYP. DOCUMENT & PROVIDE PHOTOS TO CLIENT.
N-36.01	BLOCKING AND OUTLET AT THIS WALL FOR WALL-MOUNTED VACUUM; COORD. HEIGHT IN FIELD W/ OWNER.
N-37	NEW LOCATION FOR SALVAGED KITCHEN CABINET; RE. D101 FOR EXIST. LOCATION. REBUILD & REFINISH AS REQ.
N-38	NEW LOCATION FOR SALVAGED BATHROOM MILLWORK. BUILD UP BOTTOM OF CABINET TO ALLOW 1 ROW OF TILE TO WRAP AT BASE. USE WATER RESISTANT MATERIALS IN CONSTRUCTION. RE. ID.
N-39	NEW SINGLE ROD W/ SINGLE SHELF AT THIS LOCATION; GC TO COORD. LAYOUT, HEIGHT, & SPACING W/ OWNER.
N-40	NEW DOUBLE ROD & DOUBLE SHELVES AT THIS LOCATION; GC TO COORD. LAYOUT, HEIGHT, & SPACING W/ OWNER.
N-41	NEW 9" SHOE SHELVING. GC TO COORD. LAYOUT W/ OWNER.
N-42	NEW 18" SHELVING. GC TO COORD. LAYOUT W/ OWNER.
N-42.03	NEW 12" SHELVING. GC TO COORD. LAYOUT W/ OWNER.
N-43	REFINISHED WOOD MANTEL, HEARTH, & NEW TILE SURROUND. RE. ID
N-44	NEW DUAL FUEL STOVE AT THIS LOCATION.
N-45	NEW REVERSE OSMOSIS FILTER AT KITCHEN SINK W/ SPLIT LINE TO REF.
N-46	DOUBLE LAYER OF GYP. & MINERAL WOOL IN WALL CAVITIES INCLUDING INT. WALLS, THIS ROOM.
N-48	NEW INSUL. PULL-DOWN STAIR ATTIC ACCESS AT CEILING; RE. STRUC.
N-50	NEW WOOD STAIR; RE. STRUC. & ID
N-51	NEW INT. 3'-0" A.F.F. WOOD HANDRAIL, BALUSTERS, & NEWEL POSTS; RE. ID & DTL 2/A801
N-51.01	NEW INT. 3-0" A.F.F. WALL MOUNTED WOOD HANDRAIL. RE. ID
N-52	DROPPED CEILING AT THIS LOCATION; (GC TO COORD. W/ HVAC INSTALLER) RE. ROOM SCHED. FOR HT.
N-53	DASHED LINE INDICATES NEW GYP. FUR DOWN WALL; (GC TO COORD. W/ HVAC INSTALLER) RE. ROOM SCHED. FOR HT.
N-55	REPAIR ALL DAMAGED TRIM WORK & COLUMNS AT FRONT FACADE IN KIND.
N-55.01	TUCKPOINT & REPAIR EXIST. BRICK & CONC. PORCH AS REQ.
N-57	NEW PVC CLAD COLUMN, TYP.; RE. STRUC. & DTL 7/A502
N-60	NEW SCREENED PORCH W/ COUNTER SUNK BOAT DRAINS. RE. DTL 10/A501

GENERAL CONSTRUCTION NOTES

1. ALL DIMENSIONS ARE "FINISH TO FINISH," UNLESS NOTED OTHERWISE. GC TO VERIFY ALL DIMS. IN FIELD.
2. GC WILL PROVIDE BATT INSULATION IN CAVITIES OF ANY EXTERIOR WALL. SEE SHEETS A301 & A501 FOR INSULATION STRATEGY.
3. GC TO INSTALL DRAFT STOPS IN COMBUSTIBLE CONSTRUCTION WHERE THERE IS USABLE SPACE ABOVE AND BELOW THE CONCEALED SPACE OF A FLOOR/CEILING ASSEMBLY. DRAFT STOPS SHALL BE INSTALLED IN ACCORDANCE WITH IRC 2021 SECTION R302.12.
4. GC WILL REPLACE FIREPROOFING IF DISTURBED OR FOUND DEFICIENT DURING THE COURSE OF CONSTRUCTION.
5. ALL NEW WINDOWS & DOORS TO BE SELECTED BY GC, AND APPROVED BY THE OWNER PRIOR TO PURCHASE AND INSTALL. ALL NEW WINDOWS & DOORS TO BE INSTALLED USING MANUFACTURES SPECS. ALL EXTERIOR DOORS & WINDOWS TO HAVE NEW DRIP CAP. CASING TO MATCH EXISTING. SEE WINDOW & DOORS SCHEDULE ON SHEET A601 FOR SIZING AND GENERAL WINDOW NOTES.
6. ALL NEW SIDING TO BE HARDIE BOARD WITH SMOOTH FINISH WITH EXPOSURE TO MATCH EXISTING. ALL NEW TRIM AND CORNER BOARDS TO BE 5" HARDIE BOARD UNLESS SPECIFIED OTHERWISE. FINISH COLOR TO BE SELECTED BY OWNER, GC TO COORDINATE A MIN. OF TWO (2) SAMPLES.
7. GC TO PROVIDE PROTECTION FOR ALL NEW INSTALLED MATERIALS, FIXTURES, MILLWORK, APPLIANCES, ETC. AND TURNED OVER AT FINAL COMPLETION FREE OF BLEMISHES, DENTS. GC RESPOSNBILE FOR REPLACING/ FIXING ANY DAMAGED ITEMS AT END OF CONSTRUCITON.

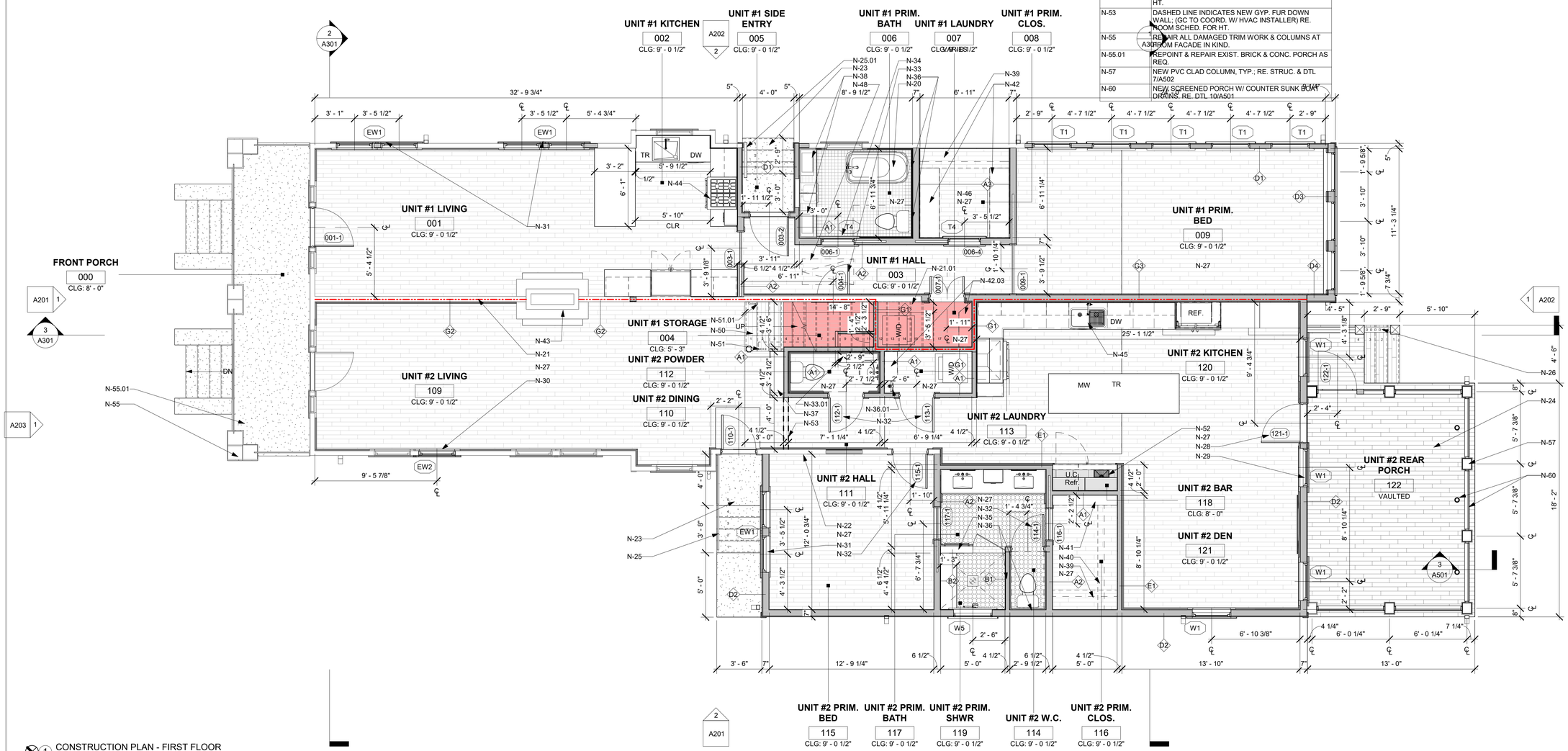

1 CONSTRUCTION PLAN - FIRST FLOOR
1/4" = 1'-0"

ADAMICK ARCHITECTURE
3301 CHIPPEWA STREET
NEW ORLEANS, LA 70115
504.322.1220

No.	Description	Date

20 DEC. 2024	CD-100%
16 DEC. 2024	CD-85%
18 NOV. 2024	CD-75%
28 OCT. 2024	DD-3
18 SEP. 2024	DD-2
06 SEP. 2024	DD-1
20 AUG. 2024	SD-3
30 JUL. 2024	SD-2
11 JUL. 2024	SD-1
20 JUN. 2024	EC-1

Project: #2024-19

COOK RESIDENCE RENOVATION & ADDITION

ADDRESS:
1317-1319 ADAMS ST. NEW ORLEANS, LA 70118

PROPOSED FIRST FLOOR PLAN & NOTES

ALEXANDER JAMES ADAMICK REG. NO. 8148 STATE OF LOUISIANA REGISTERED ARCHITECT

DATE:	2/12/2025 12:50:13 PM
PROJECT NO.:	2024-19
DRAWING BY:	IF/KB
CHECKED BY:	AJA
SHEET NO.:	A101
CAD FILE NO: 2024-19\PDF OUT\EC	21/39

LEGEND: CONSTRUCTION PLAN

- EXISTING WALL
- NEW WALL
- NEW DOOR
- EXISTING DOOR
- NEW THRESHOLD

SHEET - KEYNOTES

Key Value	Keynote Text
N-21	DASHED LINE INDICATES NEW 1-HR RATED WALL, TYP. PER TAG; RE. WALL SCHED.
N-27	RE. ROOM SCHED. FOR FLOOR MATERIAL & FINISH THROUGHOUT.
N-28	RE. DOOR SCHED. FOR TYPE; TYP. PER TAG
N-29	RE. WINDOW SCHED. FOR TYPE; TYP. PER TAG
N-32	NEW LOCATION FOR SALVAGED DOOR PANEL. RE. D101 FOR ORIGINAL LOCATION; TYP. PER TAG.
N-33.01	NEW CONCEALED BEADBOARD DOUBLE DOOR AT THIS LOCATION. RE. ID.
N-39	NEW SINGLE ROD W/ SINGLE SHELF AT THIS LOCATION; GC TO COORD. LAYOUT, HEIGHT, & SPACING W/ OWNER.
N-42.01	NEW 12" TV SURROUND SHELVING. RE. ID.
N-42.02	NEW MILLWORK CABINET AT THIS LOCATION. RE. ID.
N-47	NEW PULL-DOWN STAIR ATTIC ACCESS AT CEILING; RE. STRUC.
N-49	INSUL. ATTIC ACCESS DOOR AT THIS LOCATION; RE. DOOR SCHED.
N-50	NEW WOOD STAIR; RE. STRUC. & ID
N-51	NEW INT. 3'-0" A.F.F. WOOD HANDRAIL, BALUSTERS, & NEWEL POSTS; RE. ID & DTL 2/A801
N-51.01	NEW INT. 3-0" A.F.F. WALL MOUNTED WOOD HANDRAIL. RE. ID

GENERAL CONSTRUCTION NOTES

1. ALL DIMENSIONS ARE "FINISH TO FINISH," UNLESS NOTED OTHERWISE. GC TO VERIFY ALL DIMS. IN FIELD.
2. GC WILL PROVIDE BATT INSULATION IN CAVITIES OF ANY EXTERIOR WALL. SEE SHEETS A301 & A501 FOR INSULATION STRATEGY.
3. GC TO INSTALL DRAFT STOPS IN COMBUSTIBLE CONSTRUCTION WHERE THERE IS USABLE SPACE ABOVE AND BELOW THE CONCEALED SPACE OF A FLOOR/CEILING ASSEMBLY. DRAFT STOPS SHALL BE INSTALLED IN ACCORDANCE WITH IRC 2021 SECTION R302.12.
4. GC WILL REPLACE FIREPROOFING IF DISTURBED OR FOUND DEFICIENT DURING THE COURSE OF CONSTRUCTION.
5. ALL NEW WINDOWS & DOORS TO BE SELECTED BY GC, AND APPROVED BY THE OWNER PRIOR TO PURCHASE AND INSTALL. ALL NEW WINDOWS & DOORS TO BE INSTALLED USING MANUFACTURES SPECS. ALL EXTERIOR DOORS & WINDOWS TO HAVE NEW DRIP CAP. CASING TO MATCH EXISTING. SEE WINDOW & DOORS SCHEDULE ON SHEET A601 FOR SIZING AND GENERAL WINDOW NOTES.
6. ALL NEW SIDING TO BE HARDIE BOARD WITH SMOOTH FINISH WITH EXPOSURE TO MATCH EXISTING. ALL NEW TRIM AND CORNER BOARDS TO BE 5" HARDIE BOARD UNLESS SPECIFIED OTHERWISE. FINISH COLOR TO BE SELECTED BY OWNER, GC TO COORDINATE A MIN. OF TWO (2) SAMPLES.
7. GC TO PROVIDE PROTECTION FOR ALL NEW INSTALLED MATERIALS, FIXTURES, MILLWORK, APPLIANCES, ETC. AND TURNED OVER AT FINAL COMPLETION FREE OF BLEMISHES, DENTS. GC RESPOSNBILE FOR REPLACING/ FIXING ANY DAMAGED ITEMS AT END OF CONSTRUCITON.

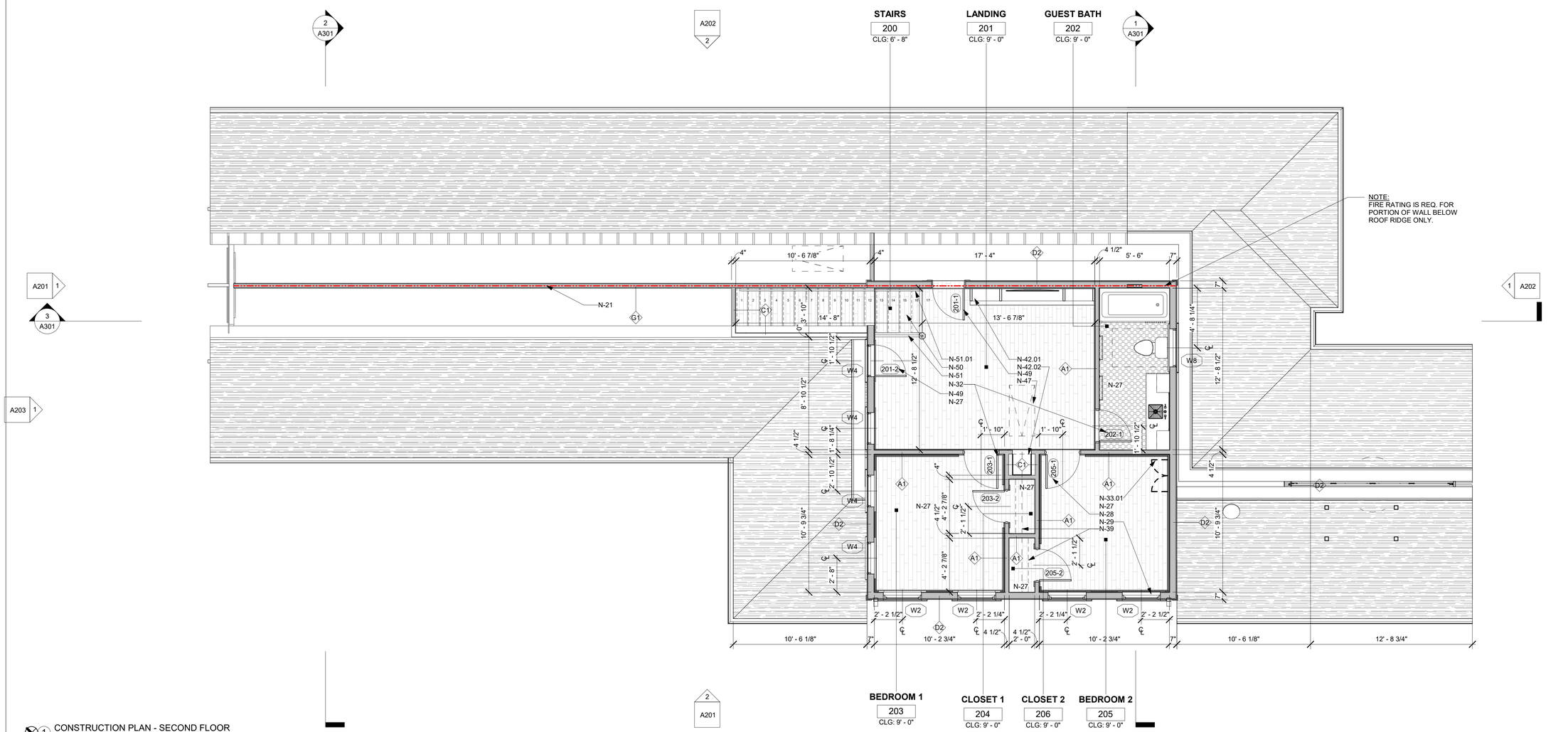

1 CONSTRUCTION PLAN - SECOND FLOOR
1/4" = 1'-0"

ADAMICK ARCHITECTURE
3301 CHIPPEWA STREET
NEW ORLEANS, LA 70115
504.322.1220

No.	Description	Date

20 DEC. 2024	CD-100%
16 DEC. 2024	CD-85%
18 NOV. 2024	CD-75%
28 OCT. 2024	DD-3
18 SEP. 2024	DD-2
06 SEP. 2024	DD-1
20 AUG. 2024	SD-3
30 JUL. 2024	SD-2
11 JUL. 2024	SD-1
20 JUN. 2024	EC-1

Project: #2024-19

COOK RESIDENCE RENOVATION & ADDITION

ADDRESS:
1317-1319 ADAMS ST. NEW ORLEANS, LA 70118

PROPOSED SECOND FLOOR PLAN & NOTES

ALEXANDER JAMES ADAMICK
REG. NO. 8148
STATE OF LOUISIANA
REGISTERED ARCHITECT

DATE:	2/12/2025 12:50:15 PM
PROJECT NO.:	2024-19
DRAWING BY:	IF/AB
CHECKED BY:	AJA
SHEET NO.:	A102
CAD FILE NO: 2024-19\PDF OUT\EC	22/39

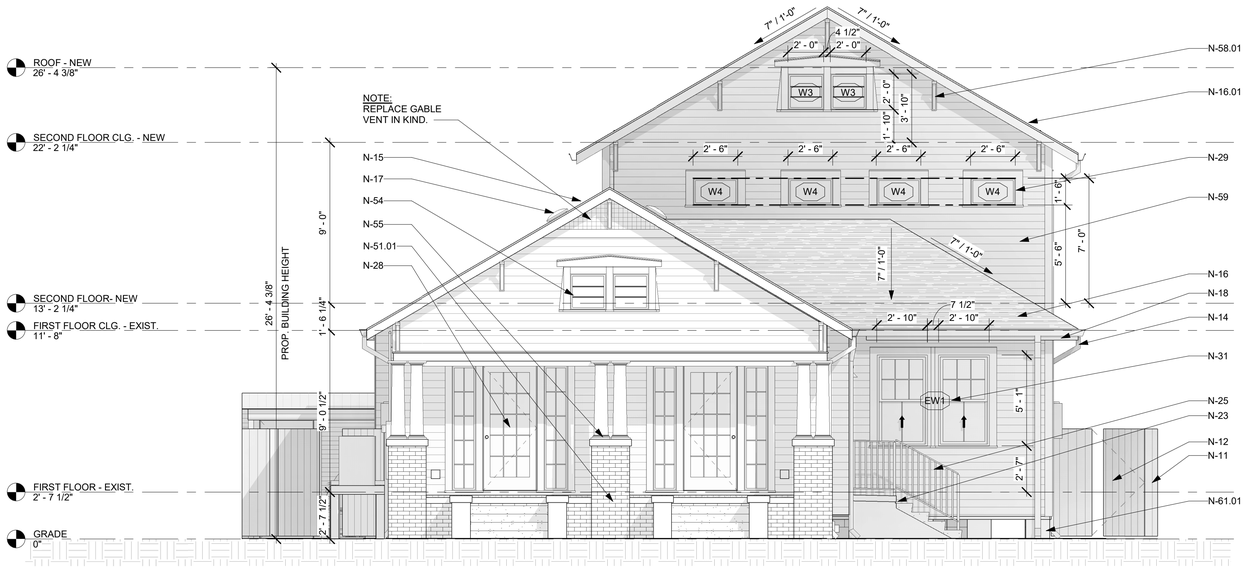

1 PROPOSED CONSTRUCTION OF THE FRONT. ELEVATION
1/4" = 1'-0"

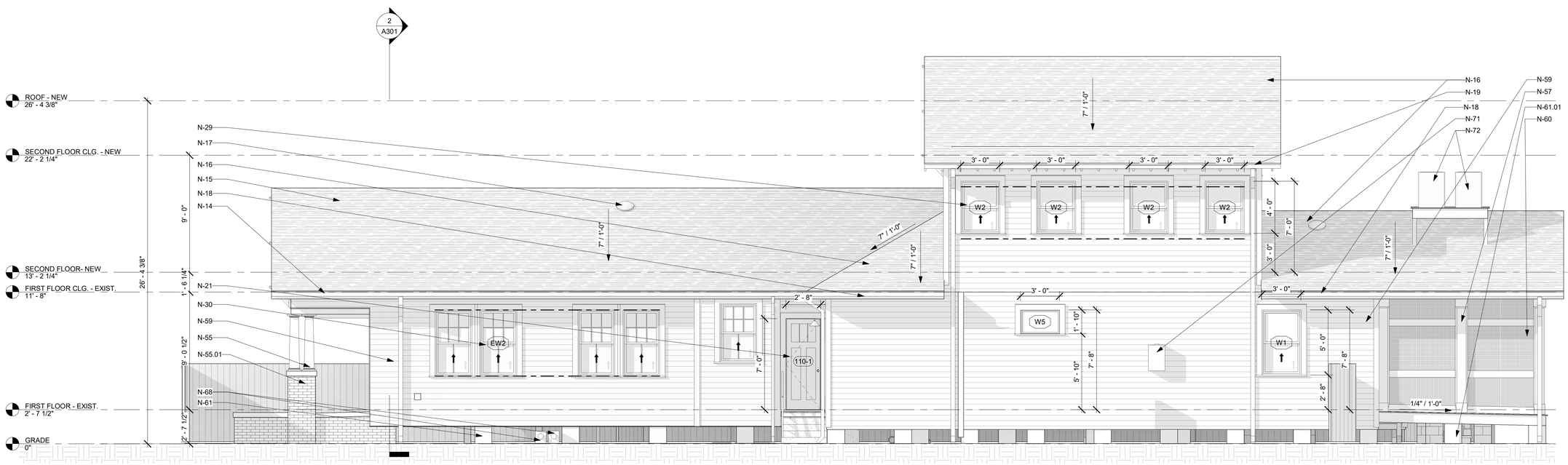

2 PROPOSED CONSTRUCTION OF THE RIGHT. SIDE ELEVATION
1/4" = 1'-0"

SHEET - KEYNOTES	
Key Value	Keynote Text
N-11	NEW 7'-0" TALL VERT. PTL WOOD FENCE; COORD. HARDWARE W/ OWNER. RE. DTL 1/A502
N-12	NEW 7'-0" TALL VERT. PTL WOOD SWING GATE; COORD. HARDWARE W/ OWNER. RE. DTL 1/A502
N-14	NEW ALUMINUM BAKED 5 1/2" K-STYLE GUTTERS CONNECTED TO 3 1/2" REC. D.S. BELOW, TYP.
N-15	NEW VENTED FORTIFIED ARCHITECTURAL SHINGLE ROOF W/ ICE & WATER BARRIER UNDERLAYMENT ATOP NEW SHEATHING; EXIST. FRAMING TO REMAIN. GC. TO COORD. CERTIFICATION & INCLUDE FEE.
N-16	NEW VENTED FORTIFIED ARCHITECTURAL SHINGLE ROOF W/ ICE & WATER BARRIER UNDERLAYMENT ATOP NEW SHEATHING; RE. STRUC. FOR SHEATHING & FRAMING SIZE. GC. TO COORD. CERTIFICATION & INCLUDE FEE.
N-16.01	NEW INSULATED FORTIFIED ARCHITECTURAL SHINGLE ROOF W/ ICE & WATER BARRIER UNDERLAYMENT ATOP NEW SHEATHING; RE. STRUC. FOR SHEATHING & FRAMING SIZE. GC. TO COORD. CERTIFICATION & INCLUDE FEE.
N-17	SYMBOL INDICATES NEW THERMOSTATIC ROOF VENT.
N-18	NEW EXPOSED RAFTER W/ BEADED PLY. FOR BDB APPEARANCE AT UNDERSIDE OF EAVE, VENT BETWEEN RAFTERS AT TOP OF WALL, TYP.
N-19	NEW EXPOSED RAFTER BEADED PLY. FOR BDB APPEARANCE AT UNDERSIDE OF EAVE, TYP. NO VENTS.
N-21	DASHED LINE INDICATES NEW 1-HR RATED WALL, TYP. PER TAG; RE. WALL SCHED.
N-23	NEW CONC. DECK WITH CONC. TREADS AT STAIR AT THIS LOCATION, SLOPED TO DRAIN (1/4 OVER 1' MIN.); RE. STRUC. & DTL 3/A502
N-25	NEW 3'-0" TALL METAL HANDRAIL W/ METAL PILASTERS AND BALUSTERS, TYP.; RE. DTL 4/A502
N-28	RE. DOOR SCHED. FOR TYPE; TYP. PER TAG
N-29	RE. WINDOW SCHED. FOR TYPE; TYP. PER TAG
N-30	NEW LOCATION FOR SALVAGED WINDOW. RE. D101 FOR ORIGINAL LOCATION; TYP. PER TAG.
N-31	NEW LOCATION FOR SALVAGED DOUBLE WINDOW. RE. D101 FOR ORIGINAL LOCATION; TYP. PER TAG.
N-51.01	NEW INT. 3:0" A.F.F. WALL MOUNTED WOOD HANDRAIL. RE. ID
N-54	SAND, CAULK & PAINT EXIST. GABLE WINDOW.
N-55	REPAIR ALL DAMAGED TRIM WORK & COLUMNS AT FROM FACADE IN KIND.
N-55.01	REPOINT & REPAIR EXIST. BRICK & CONC. PORCH AS REQ.
N-57	NEW PVC CLAD COLUMN, TYP.; RE. STRUC. & DTL 7/A502
N-58.01	NEW 20" X 20" CORBEL BRACKETS TO MATCH EXIST. THIS ELEVATION ONLY.
N-59	NEW HARDIE-PLANK LAP-SIDING W/ SMOOTH FINISH AND EXPOSURE TO MATCH EXIST.; TRIM & CORNERBOARDS TO BE 5 1/2" HARDIE-TRIM; RE. WALL SCHED. NEW SHEATHING W/ VAPOR BARRIER & INSULATION AT EXIST. PORTION OF HOUSE; TYP.
N-60	NEW SCREENED PORCH W/ COUNTER SUNK BOAT DRAINS. RE. DTL 10/A501
N-61	REPAIR EXIST. FOUNDATION W/ LIME RICH MORTAR RECIPE, TYP.; RE. T002
N-61.01	NEW FOUNDATION W/ PARGE COAT; RE. STRUC.
N-68	EXIST. LOCATION OF GAS METER.
N-71	NEW TANK LESS GAS W.H. AT THIS LOCATION; PLUMBER TO SIZE & PROVIDE DEDICATED GAS LINE.
N-72	NEW 16 SEER A/C CONDENSER ON METAL PLATFORM CURB MOUNTED TO ROOF. PROVIDE REQ. CLEARANCES I.A.W. CODE.

GENERAL CONSTRUCTION NOTES

1. ALL DIMENSIONS ARE "FINISH TO FINISH," UNLESS NOTED OTHERWISE. GC TO VERIFY ALL DIMS. IN FIELD.
2. GC WILL PROVIDE BATT INSULATION IN CAVITIES OF ANY EXTERIOR WALL. SEE SHEETS A301 & A501 FOR INSULATION STRATEGY.
3. GC TO INSTALL DRAFT STOPS IN COMBUSTIBLE CONSTRUCTION WHERE THERE IS USABLE SPACE ABOVE AND BELOW THE CONCEALED SPACE OF A FLOOR/CEILING ASSEMBLY. DRAFT STOPS SHALL BE INSTALLED IN ACCORDANCE WITH IRC 2021 SECTION R302.12.
4. GC WILL REPLACE FIREPROOFING IF DISTURBED OR FOUND DEFICIENT DURING THE COURSE OF CONSTRUCTION.
5. ALL NEW WINDOWS & DOORS TO BE SELECTED BY GC, AND APPROVED BY THE OWNER PRIOR TO PURCHASE AND INSTALL. ALL NEW WINDOWS & DOORS TO BE INSTALLED USING MANUFACTURES SPECS. ALL EXTERIOR DOORS & WINDOWS TO HAVE NEW DRIP CAP. CASING TO MATCH EXISTING. SEE WINDOW & DOORS SCHEDULE ON SHEET A601 FOR SIZING AND GENERAL WINDOW NOTES.
6. ALL NEW SIDING TO BE HARDIE BOARD WITH SMOOTH FINISH WITH EXPOSURE TO MATCH EXISTING. ALL NEW TRIM AND CORNER BOARDS TO BE 5" HARDIE BOARD UNLESS SPECIFIED OTHERWISE. FINISH COLOR TO BE SELECTED BY OWNER, GC TO COORDINATE A MIN. OF TWO (2) SAMPLES.
7. GC TO PROVIDE PROTECTION FOR ALL NEW INSTALLED MATERIALS, FIXTURES, MILLWORK, APPLIANCES, ETC. AND TURNED OVER AT FINAL COMPLETION FREE OF BLEMISHES, DENTS. GC RESPOSNBILE FOR REPLACING/ FIXING ANY DAMAGED ITEMS AT END OF CONSTRUCITON.

ADAMICK ARCHITECTURE
3301 CHIPPEWA STREET
NEW ORLEANS, LA 70115
504.322.1220

No.	Description	Date

20 DEC. 2024	CD-100%
16 DEC. 2024	CD-85%
18 NOV. 2024	CD-75%
28 OCT. 2024	DD-3
18 SEP. 2024	DD-2
06 SEP. 2024	DD-1
20 AUG. 2024	SD-3
30 JUL. 2024	SD-2
11 JUL. 2024	SD-1
20 JUN. 2024	EC-1

Project: #2024-19

COOK RESIDENCE RENOVATION & ADDITION

ADDRESS:
1317-1319 ADAMS ST. NEW ORLEANS, LA 70118

PROPOSED EXTERIOR ELEVATIONS & NOTES

ALEXANDER JAMES ADAMICK
REG. NO. 8148
STATE OF LOUISIANA
REGISTERED ARCHITECT

DATE:	2/12/2025 12:51:02 PM
PROJECT NO.:	2024-19
DRAWING BY:	ICF
CHECKED BY:	AJA
SHEET NO.:	A201
CAD FILE NO: 2024-19\PDF OUT\EC	23/39

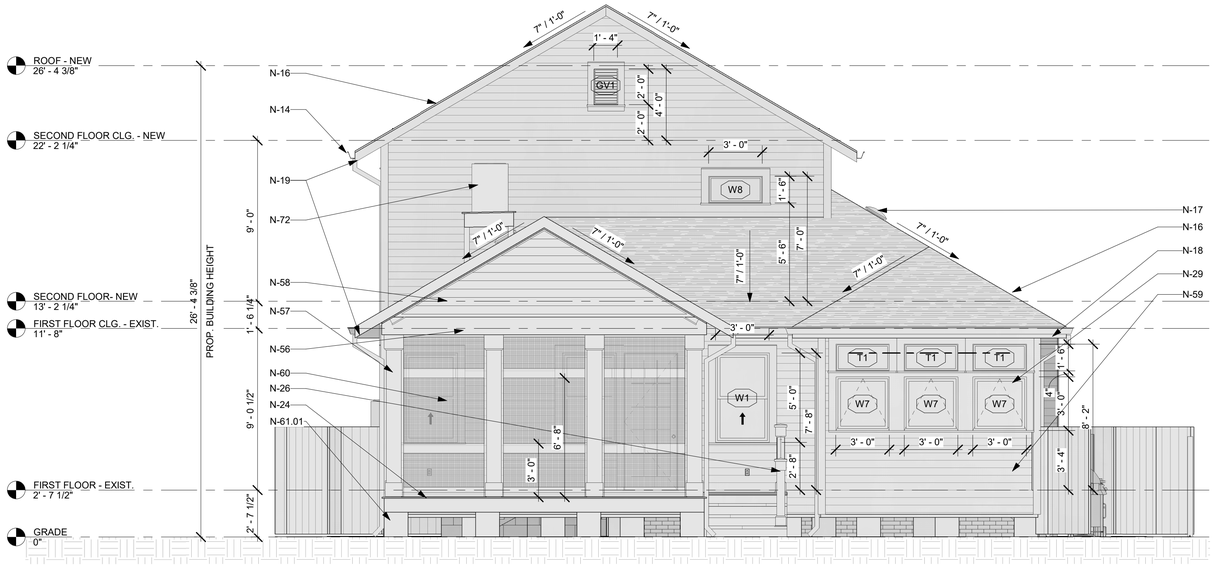

1 PROPOSED CONSTRUCTION OF THE REAR ELEVATION
1/4" = 1'-0"

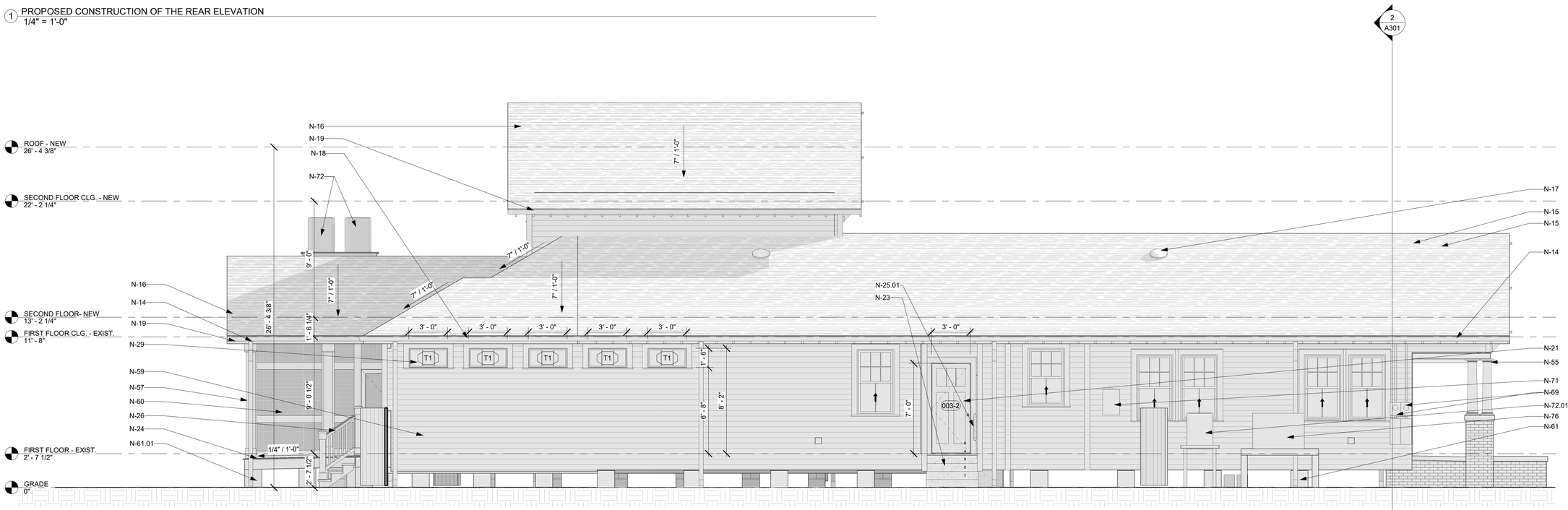

2 PROPOSED CONSTRUCTION OF THE LEFT SIDE ELEVATION
1/4" = 1'-0"

SHEET - KEYNOTES

Key Value	Keynote Text
N-14	NEW ALUMINUM BAKED 5 1/2" K-STYLE GUTTERS CONNECTED TO 3 1/2" REC. D.S. BELOW, TYP.
N-15	NEW VENTED FORTIFIED ARCHITECTURAL SHINGLE ROOF W/ ICE & WATER BARRIER UNDERLAYMENT ATOP NEW SHEATHING; EXIST. FRAMING TO REMAIN. GC. TO COORD. CERTIFICATION & INCLUDE FEE.
N-16	NEW VENTED FORTIFIED ARCHITECTURAL SHINGLE ROOF W/ ICE & WATER BARRIER UNDERLAYMENT ATOP NEW SHEATHING; RE. STRUC. FOR SHEATHING & FRAMIING SIZE. GC. TO COORD. CERTIFICATION & INCLUDE FEE.
N-17	SYMBOL INDICATES NEW THERMOSTATIC ROOF VENT.
N-18	NEW EXPOSED RAFTER W/ BEADED PLY. FOR BDB APPEARANCE AT UNDERSIDE OF EAVE, VENT BETWEEN RAFTERS AT TOP OF WALL, TYP.
N-19	NEW EXPOSED RAFTER BEADED PLY. FOR BDB APPEARANCE AT UNDERSIDE OF EAVE, TYP. NO VENTS.
N-21	DASHED LINE INDICATES NEW 1-HR RATED WALL, TYP. PER TAG; RE. WALL SCHED.
N-23	NEW CONC. DECK WITH CONC. TREADS AT STAIR AT THIS LOCATION; SLOPED TO DRAIN (1/4 OVER 1' MIN.); RE. STRUC. & DTL 3/A502
N-24	NEW AERATIS HERITAGE T&G DECKING ATOP PTL SLEEPERS W/ AERATIS TREADS AT STAIR AT THIS LOCATION. SLOPED TO DRAIN (1/4 OVER 1' MIN.); RE. STRUC. & DTL 3/A501
N-25.01	NEW 3'-0" TALL WALL MOUNTED METAL HANDRAIL.
N-26	NEW 3'-0" PTL PAINTED HANDRAIL W/ PTL PAINTED PILASTERS AND BALUSTERS, TYP.; RE. DTL 5/A502
N-29	RE. WINDOW SCHED. FOR TYPE; TYP. PER TAG
N-55	REPAIR ALL DAMAGED TRIM WORK & COLUMNS AT FROM FACADE IN KIND.
N-56	NEW PVC CLAD BOXED BEAM; RE. STRUC. & DTL 6/A502
N-57	NEW PVC CLAD COLUMN, TYP.; RE. STRUC. & DTL 7/A502
N-58	NEW LOUVERED VENT WALL ABOVE SCREEN PORCH.
N-59	NEW HARDIE-PLANK LAP-SIDING W/ SMOOTH FINISH AND EXPOSURE TO MATCH EXIST.; TRIM & CORNERBOARDS TO BE 5 1/2" HARDIE-TRIM; RE. WALL SCHED. NEW SHEATHING W/ VAPOR BARRIER & INSULATION AT EXIST. PORTION OF HOUSE; TYP.
N-60	NEW SCREENED PORCH W/ COUNTER SUNK BOAT DRAINS. RE. DTL 10/A501
N-61	REPAIR EXIST. FOUNDATION W/ LIME RICH MORTAR RECIPE. TYP.; RE. T002
N-61.01	NEW FOUNDATION W/ PARGE COAT; RE. STRUC.
N-69	EXIST. LOCATION OF ELECTRICAL METER, ELECTRICIAN TO RESIZE PANELS FOR ADDITIONS.
N-71	NEW TANK LESS GAS W.H. AT THIS LOCATION; PLUMBER TO SIZE & PROVIDE DEDICATED GAS LINE.
N-72	NEW 16 SEER A/C CONDENSER ON METAL PLATFORM CURB MOUNTED TO ROOF. PROVIDE REQ. CLEARANCES I.A.W. CODE.
N-72.01	NEW 16 SEER A/C CONDENSER ON PTL PLATFORM 3'-0" A.F.G. PROVIDE REQ. CLEARANCES I.A.W. CODE.
N-76	GENERAC GENERATOR AT THIS LOCATION TO POWER 1319 SIDE.

GENERAL CONSTRUCTION NOTES

1. ALL DIMENSIONS ARE "FINISH TO FINISH," UNLESS NOTED OTHERWISE. GC TO VERIFY ALL DIMS. IN FIELD.
2. GC WILL PROVIDE BATT INSULATION IN CAVITIES OF ANY EXTERIOR WALL. SEE SHEETS A301 & A501 FOR INSULATION STRATEGY.
3. GC TO INSTALL DRAFT STOPS IN COMBUSTIBLE CONSTRUCTION WHERE THERE IS USABLE SPACE ABOVE AND BELOW THE CONCEALED SPACE OF A FLOOR/CEILING ASSEMBLY. DRAFT STOPS SHALL BE INSTALLED IN ACCORDANCE WITH IRC 2021 SECTION R302.12.
4. GC WILL REPLACE FIREPROOFING IF DISTURBED OR FOUND DEFICIENT DURING THE COURSE OF CONSTRUCTION.
5. ALL NEW WINDOWS & DOORS TO BE SELECTED BY GC, AND APPROVED BY THE OWNER PRIOR TO PURCHASE AND INSTALL. ALL NEW WINDOWS & DOORS TO BE INSTALLED USING MANUFACTURES SPECS. ALL EXTERIOR DOORS & WINDOWS TO HAVE NEW DRIP CAP. CASING TO MATCH EXISTING. SEE WINDOW & DOORS SCHEDULE ON SHEET A601 FOR SIZING AND GENERAL WINDOW NOTES.
6. ALL NEW SIDING TO BE HARDIE BOARD WITH SMOOTH FINISH WITH EXPOSURE TO MATCH EXISTING. ALL NEW TRIM AND CORNER BOARDS TO BE 5" HARDIE BOARD UNLESS SPECIFIED OTHERWISE. FINISH COLOR TO BE SELECTED BY OWNER, GC TO COORDINATE A MIN. OF TWO (2) SAMPLES.
7. GC TO PROVIDE PROTECTION FOR ALL NEW INSTALLED MATERIALS, FIXTURES, MILLWORK, APPLIANCES, ETC. AND TURNED OVER AT FINAL COMPLETION FREE OF BLEMISHES, DENTS. GC RESPOSNBILE FOR REPLACING/ FIXING ANY DAMAGED ITEMS AT END OF CONSTRUCITON.

ADAMICK ARCHITECTURE
3301 CHIPPEWA STREET
NEW ORLEANS, LA 70115
504.322.1220

No.	Description	Date

20 DEC. 2024	CD-100%
16 DEC. 2024	CD-85%
18 NOV. 2024	CD-75%
28 OCT. 2024	DD-3
18 SEP. 2024	DD-2
06 SEP. 2024	DD-1
20 AUG. 2024	SD-3
30 JUL. 2024	SD-2
11 JUL. 2024	SD-1
20 JUN. 2024	EC-1

Project: #2024-19

COOK RESIDENCE RENOVATION & ADDITION

ADDRESS:
1317-1319 ADAMS ST. NEW ORLEANS, LA 70118

PROPOSED EXTERIOR ELEVATIONS & NOTES

ALEXANDER JAMES ADAMICK
REG. NO. 8148
STATE OF LOUISIANA
REGISTERED ARCHITECT

DATE:	2/12/2025 12:51:37 PM
PROJECT NO.:	2024-19
DRAWING BY:	XXX
CHECKED BY:	AJA
SHEET NO.:	A202
CAD FILE NO: 2024-19\PDF OUT\EC	24/39

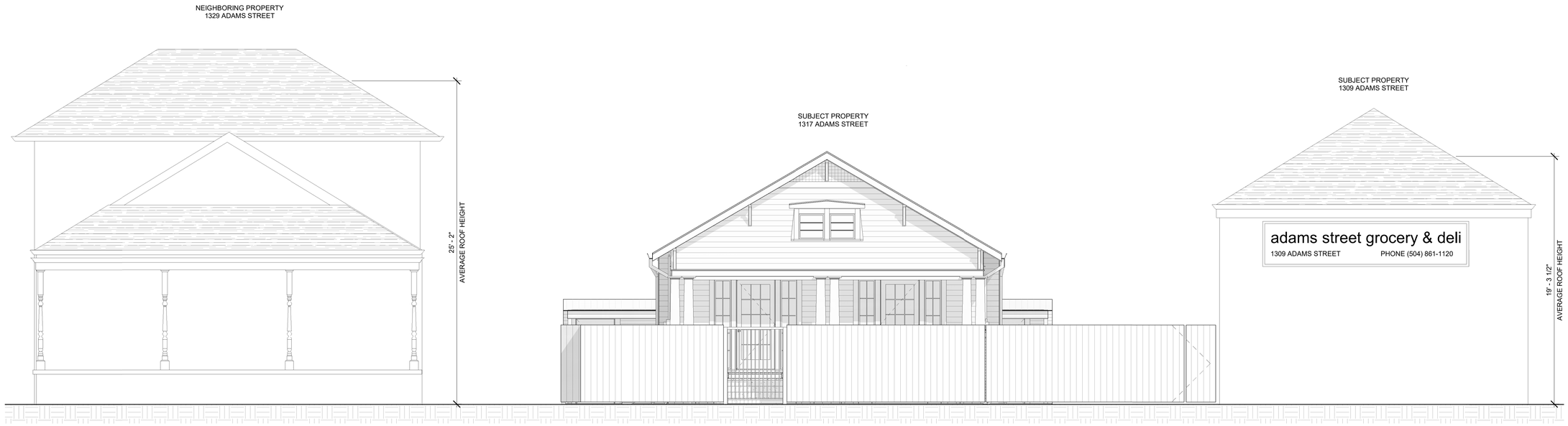

2 EXISTING STREET CONTEXT ELEVATION
1/4" = 1'-0"

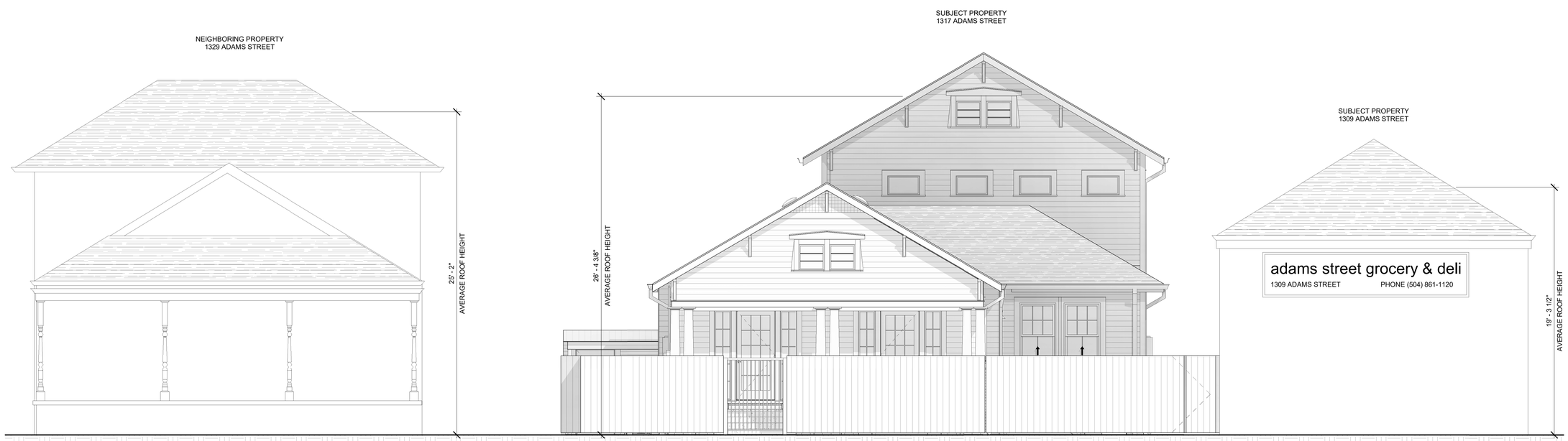

1 PROPOSED STREET CONTEXT ELEVATION
1/4" = 1'-0"

ADAMICK ARCHITECTURE
3301 CHIPPEWA STREET
NEW ORLEANS, LA 70115
504.322.1220

No.	Description	Date

20 DEC. 2024	CD-100%
16 DEC. 2024	CD-85%
18 NOV. 2024	CD-75%
28 OCT. 2024	DD-3
18 SEP. 2024	DD-2
06 SEP. 2024	DD-1
20 AUG. 2024	SD-3
30 JUL. 2024	SD-2
11 JUL. 2024	SD-1
20 JUN. 2024	EC-1

Project: #2024-19

COOK RESIDENCE RENOVATION & ADDITION

ADDRESS:
1317-1319 ADAMS ST. NEW ORLEANS, LA 70118

PROPOSED STREET ELEVATIONS & NOTES

ALEXANDER JAMES ADAMICK
REG. NO. 8148
STATE OF LOUISIANA
REGISTERED ARCHITECT

DATE:	2/12/2025 12:51:53 PM
PROJECT NO.:	2024-19
DRAWING BY:	CH
CHECKED BY:	AJA
SHEET NO.:	A203
CAD FILE NO: 2024-19\PDF OUT\EC	25/39

1 PROPOSED CONSTRUCTIION LAT. BUILDING SECTION @ NEW ADDITION
1/4" = 1'-0"

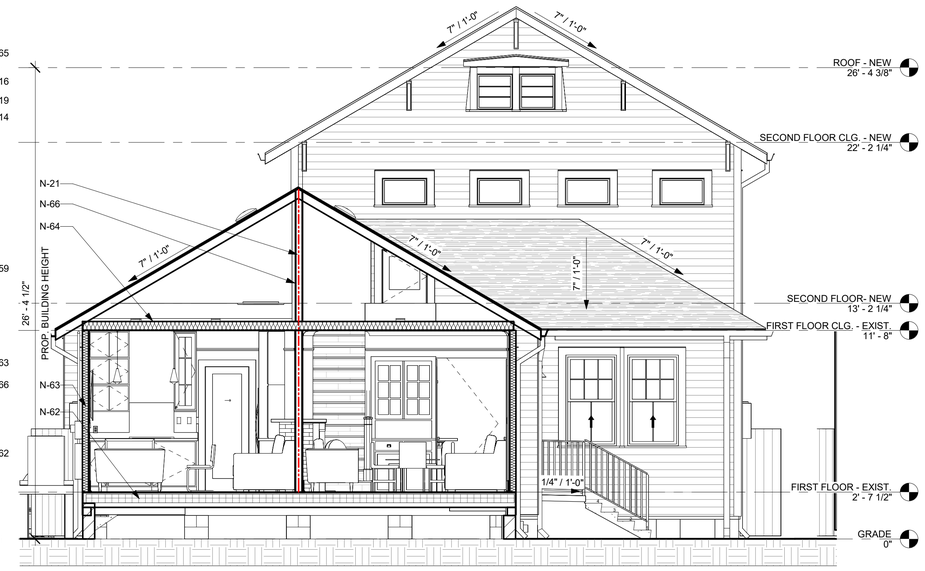

2 PROPOSED CONSTRUCTION LAT. SECTION @ EXIST. BUILDING
1/4" = 1'-0"

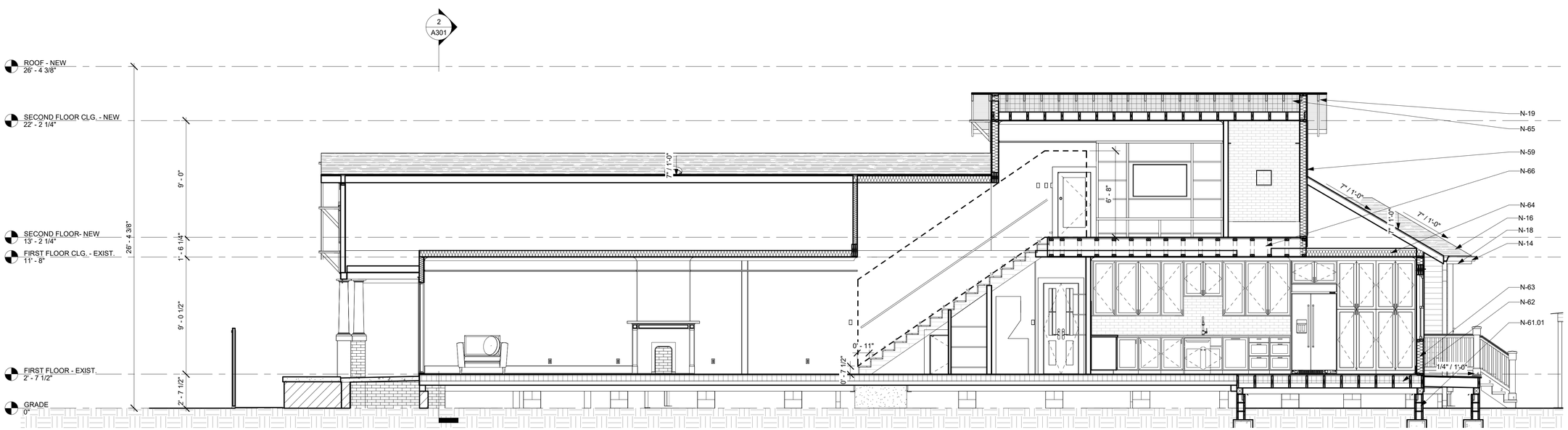

3 PROPOSED CONSTRUCTION LONG. BUILDING SECTION
1/4" = 1'-0"

GENERAL CONSTRUCTION NOTES

1. ALL DIMENSIONS ARE "FINISH TO FINISH," UNLESS NOTED OTHERWISE. GC TO VERIFY ALL DIMS. IN FIELD.
2. GC WILL PROVIDE BATT INSULATION IN CAVITIES OF ANY EXTERIOR WALL. SEE SHEETS A301 & A501 FOR INSULATION STRATEGY.
3. GC TO INSTALL DRAFT STOPS IN COMBUSTIBLE CONSTRUCTION WHERE THERE IS USABLE SPACE ABOVE AND BELOW THE CONCEALED SPACE OF A FLOOR/CEILING ASSEMBLY. DRAFT STOPS SHALL BE INSTALLED IN ACCORDANCE WITH IRC 2021 SECTION R302.12.
4. GC WILL REPLACE FIREPROOFING IF DISTURBED OR FOUND DEFICIENT DURING THE COURSE OF CONSTRUCTION.
5. ALL NEW WINDOWS & DOORS TO BE SELECTED BY GC, AND APPROVED BY THE OWNER PRIOR TO PURCHASE AND INSTALL. ALL NEW WINDOWS & DOORS TO BE INSTALLED USING MANUFACTURES SPECS. ALL EXTERIOR DOORS & WINDOWS TO HAVE NEW DRIP CAP. CASING TO MATCH EXISTING. SEE WINDOW & DOORS SCHEDULE ON SHEET A601 FOR SIZING AND GENERAL WINDOW NOTES.
6. ALL NEW SIDING TO BE HARDIE BOARD WITH SMOOTH FINISH WITH EXPOSURE TO MATCH EXISTING. ALL NEW TRIM AND CORNER BOARDS TO BE 5" HARDIE BOARD UNLESS SPECIFIED OTHERWISE. FINISH COLOR TO BE SELECTED BY OWNER, GC TO COORDINATE A MIN. OF TWO (2) SAMPLES.
7. GC TO PROVIDE PROTECTION FOR ALL NEW INSTALLED MATERIALS, FIXTURES, MILLWORK, APPLIANCES, ETC. AND TURNED OVER AT FINAL COMPLETION FREE OF BLEMISHES, DENTS. GC RESPOSNBILE FOR REPLACING/ FIXING ANY DAMAGED ITEMS AT END OF CONSTRUCITON.

SHEET - KEYNOTES

Key Value	Keynote Text
N-14	NEW ALUMINUM BAKED 5 1/2" K-STYLE GUTTERS CONNECTED TO 3 1/2" REC. D.S. BELOW, TYP.
N-16	NEW VENTED FORTIFIED ARCHITECTURAL SHINGLE ROOF W/ ICE & WATER BARRIER UNDERLAYMENT ATOP NEW SHEATHING; RE. STRUC. FOR SHEATHING & FRAMING SIZE. GC. TO COORD. CERTIFICATION & INCLUDE FEE.
N-18	NEW EXPOSED RAFTER W/ BEADED PLY. FOR BDB APPEARANCE AT UNDERSIDE OF EAVE. VENT BETWEEN RAFTERS AT TOP OF WALL, TYP.
N-19	NEW EXPOSED RAFTER BEADED PLY. FOR BDB APPEARANCE AT UNDERSIDE OF EAVE, TYP. NO VENTS.
N-21	DASHED LINE INDICATES NEW 1-HR RATED WALL, TYP. PER TAG; RE. WALL SCHED.
N-59	NEW HARDIE-PLANK LAP-SIDING W/ SMOOTH FINISH AND EXPOSURE TO MATCH EXIST.; TRIM & CORNERBOARDS TO BE 5 1/2" HARDIE-TRIM; RE. WALL SCHED. NEW SHEATHING W/ VAPOR BARRIER & INSULATION AT EXIST. PORTION OF HOUSE; TYP.
N-61.01	NEW FOUNDATION W/ PARGE COAT; RE. STRUC.
N-62	R-13 RIGID FOAM BOARD INSUL. AT FLOOR JOIST, TYP.
N-63	R-13 BATT INSULATION MIN. AT EXT. WALLS. TYP.
N-64	R-30 BATT INSULATION AT CLG., TYP.
N-65	R-30 OPEN CELL SPRAYFOAM INSULATION AT ROOF RAFTER, THIS ATTIC ONLY.
N-66	NEW 2X FLOOR, WALL, & CLG. FRAMING, TYP.; RE. STRUC.

ADAMICK ARCHITECTURE
3301 CHIPPEWA STREET
NEW ORLEANS, LA 70115
504.322.1220

No.	Description	Date

20 DEC. 2024	CD-100%
16 DEC. 2024	CD-85%
18 NOV. 2024	CD-75%
28 OCT. 2024	DD-3
18 SEP. 2024	DD-2
06 SEP. 2024	DD-1
20 AUG. 2024	SD-3
30 JUL. 2024	SD-2
11 JUL. 2024	SD-1
20 JUN. 2024	EC-1

Project: #2024-19

COOK RESIDENCE RENOVATION & ADDITION

ADDRESS:
1317-1319 ADAMS ST. NEW ORLEANS, LA 70118

PROPOSED BUILDING SECTIONS & NOTES

ALEXANDER JAMES ADAMICK
REG. NO. 8748
STATE OF LOUISIANA
REGISTERED ARCHITECT

DATE:	2/12/2025 12:52:01 PM
PROJECT NO.:	2024-19
DRAWING BY:	XXX
CHECKED BY:	AJA
SHEET NO.:	A301
CAD FILE NO: 2024-19\PDF OUT\EC	26/39

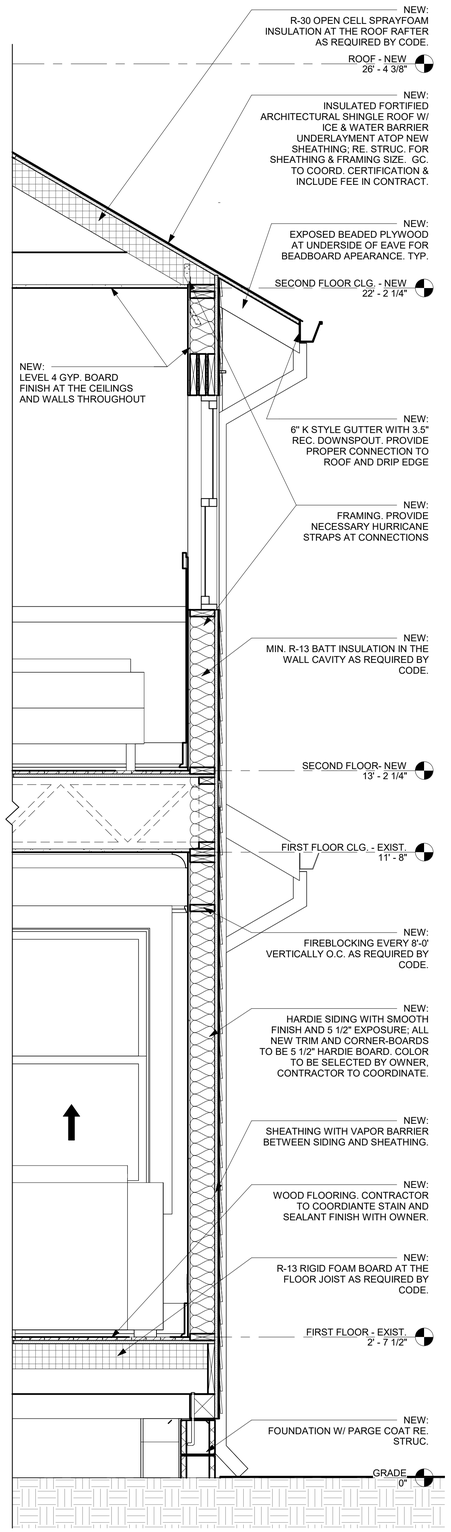

1 WALL SECTION - NEW
3/4" = 1'-0"

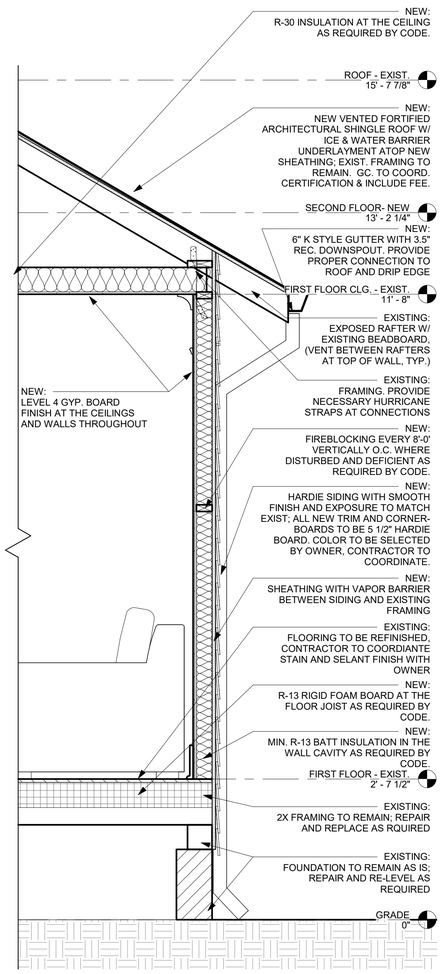

2 WALL SECTION - EXISTING
3/4" = 1'-0"

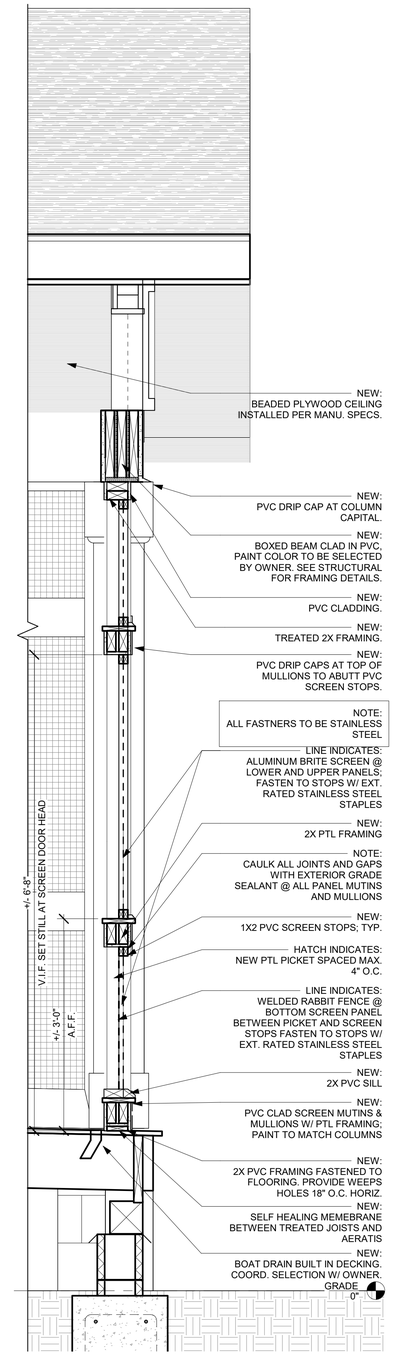

3 SECTION DTL - SCREENED PORCH
1" = 1'-0"

ADAMICK ARCHITECTURE
3301 CHIPPEWA STREET
NEW ORLEANS, LA 70115
504.322.1220

No.	Description	Date

20 DEC. 2024	CD-100%
16 DEC. 2024	CD-85%
18 NOV. 2024	CD-75%
28 OCT. 2024	DD-3
18 SEP. 2024	DD-2
06 SEP. 2024	DD-1
20 AUG. 2024	SD-3
30 JUL. 2024	SD-2
11 JUL. 2024	SD-1
20 JUN. 2024	EC-1

Project: #2024-19

COOK RESIDENCE RENOVATION & ADDITION

ADDRESS:
1317-1319 ADAMS ST. NEW ORLEANS, LA 70118

CONSTRUCTION SECTION DETAILS

ALEXANDER JAMES ADAMICK
REG. NO. 8148
STATE OF LOUISIANA
REGISTERED ARCHITECT

DATE:	2/12/2025 12:52:02 PM
PROJECT NO.:	2024-19
DRAWING BY:	ICF
CHECKED BY:	AJA
SHEET NO.:	A501
CAD FILE NO: 2024-19\PDF OUT\EC	27/39

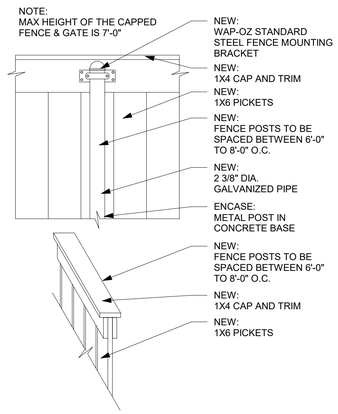

1 DETAIL - WOOD FENCE - VERT.
1" = 1'-0"

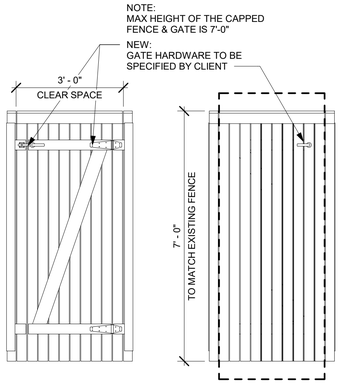

2 DETAIL - WOOD GATE - VERT.
1/2" = 1'-0"

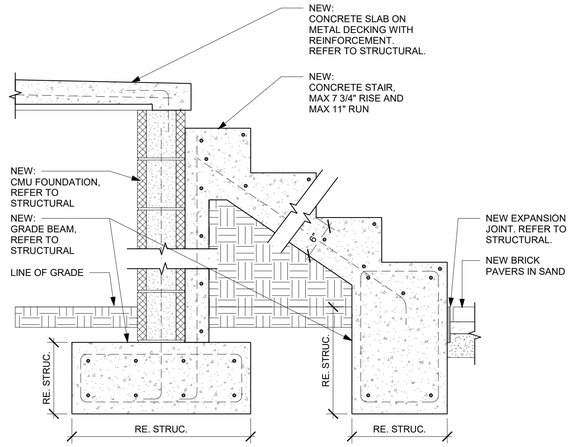

3 DETAIL - CONCRETE STAIR - GRADE BEAM
1" = 1'-0"

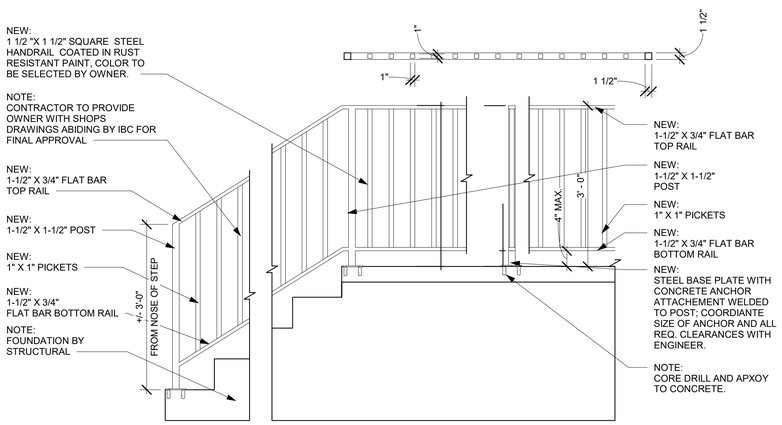

4 DETAIL - METAL HANDRAIL
3/4" = 1'-0"

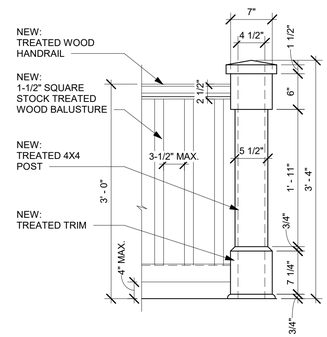

5 DETAIL - WOOD HANDRAIL
1" = 1'-0"

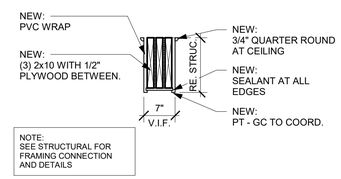

6 DETAIL - BOXED OUT BEAM
3/4" = 1'-0"

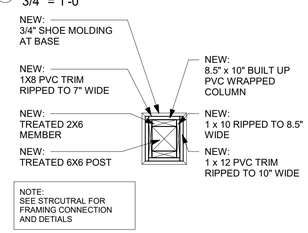

7 DETAIL - BOXED OUT COLUMN
3/4" = 1'-0"

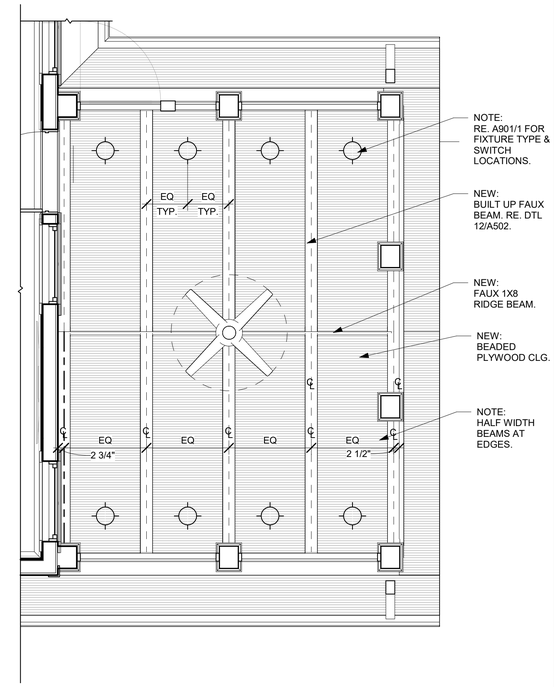

11 NEW - FIRST FLOOR RCP
3/8" = 1'-0"

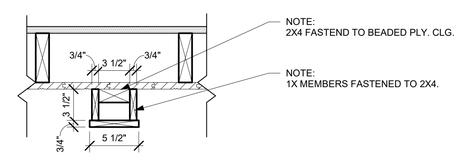

12 DETAIL - FAUX BEAM
1 1/2" = 1'-0"

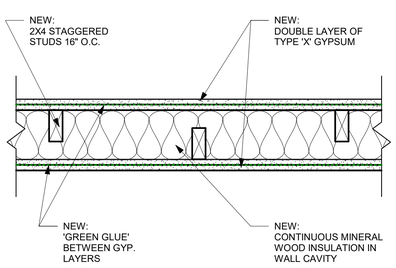

8 WALL TYPE - G3
1 1/2" = 1'-0"

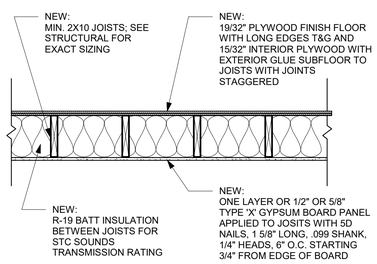

9 DETAIL - UL-L512 1-HR RATED CEILING ASSEMBLY
3/4" = 1'-0"

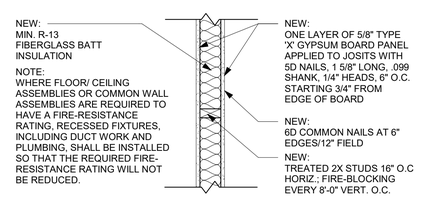

10 DETAIL - UL-305 1-HR RATED WALLS
1" = 1'-0"

ADAMICK ARCHITECTURE
3301 CHIPPEWA STREET
NEW ORLEANS, LA 70115
504.322.1220

No.	Description	Date

20 DEC. 2024	CD-100%
16 DEC. 2024	CD-85%
18 NOV. 2024	CD-75%
28 OCT. 2024	DD-3
18 SEP. 2024	DD-2
06 SEP. 2024	DD-1
20 AUG. 2024	SD-3
30 JUL. 2024	SD-2
11 JUL. 2024	SD-1
20 JUN. 2024	EC-1

Project: #2024-19

COOK RESIDENCE RENOVATION & ADDITION

ADDRESS:
1317-1319 ADAMS ST. NEW ORLEANS, LA 70118

CONSTRUCTION DETAILS

ALEXANDER JAMES ADAMICK REG. NO. 8148 STATE OF LOUISIANA REGISTERED ARCHITECT

DATE:	2/12/2025 12:52:03 PM
PROJECT NO.:	2024-19
DRAWING BY:	XXX
CHECKED BY:	AJA
SHEET NO.:	A502
CAD FILE NO: 2024-19\PDF OUT\EC	28/39

WINDOW SCHEDULE

WDW TAG	WDW TYPE	WIDTH	HEIGHT	SILL	HEADER	WINDOW MAT.	GLAZING	EXT. TRIM	INT. TRIM	COUNT	REMARKS
EW1	B	2' - 10"	5' - 1"	2' - 7"	7' - 8"	EXIST.	EXIST.	HARDIE	EXIST.	3	EXISTING WINDOW. RE. D101 FOR EXIST. LOCATION.
EW2	A	2' - 10"	5' - 1"	2' - 7"	7' - 8"	EXIST.	EXIST.	HARDIE	EXIST.	1	EXISTING WINDOW. RE. D101 FOR EXIST. LOCATION.
GV1	C	1' - 4"	2' - 0"	11' - 0"	13' - 0"	ALUM.	ALUME BRITE	HARDIE	N/A	1	GABLE VENT
T1	D	3' - 0"	1' - 6"	6' - 8"	8' - 2"	ALUM. CLAD	DOUBLE PANE	HARDIE	MATCH EXIST.	8	TRANSOM WINDOW.
T4	E	2' - 6"	1' - 2"	7' - 4"	8' - 6"	WOOD	SINGLE PANE	N/A	MATCH EXIST.	2	TRANSOM WINDOW.
W1	F	3' - 0"	5' - 0"	2' - 8"	7' - 8"	ALUM. CLAD	DOUBLE PANE	HARDIE	MATCH EXIST.	4	
W2	F	3' - 0"	4' - 0"	3' - 0"	7' - 0"	ALUM. CLAD	DOUBLE PANE	HARDIE	MATCH EXIST.	4	
W3	G	2' - 0"	2' - 0"	10' - 10"	12' - 10"	ALUM. CLAD	DOUBLE PANE	HARDIE	N/A	2	DOUBLE GABLE WINDOW.
W4	E	2' - 6"	1' - 6"	5' - 6"	7' - 0"	ALUM. CLAD	DOUBLE PANE	HARDIE	MATCH EXIST.	4	
W5	E	3' - 0"	1' - 10"	5' - 10"	7' - 8"	ALUM. CLAD	DOUBLE PANE	HARDIE	MATCH EXIST.	1	
W7	E	3' - 0"	3' - 0"	3' - 4"	6' - 4"	ALUM. CLAD	DOUBLE PANE	HARDIE	MATCH EXIST.	3	HOPPER WINDOW.
W8	E	3' - 0"	1' - 6"	5' - 6"	7' - 0"	ALUM. CLAD	DOUBLE PANE	HARDIE	MATCH EXIST.	1	

Grand total: 37

GENERAL NOTES: WINDOW SCHEDULE

1. CONTRACTOR SHALL PROVIDE OWNER WITH WINDOW, CASING, & TRIM SPECIFICATIONS FOR APPROVAL PRIOR TO PURCHASE AND INSTALLATION.
2. ALL HARDWARE TO BE SELECTED BY OWNER UNLESS OTHERWISE NOTED. CONTRACTOR SHALL COORDINATE WITH OWNER PRIOR TO PURCHASE AND INSTALLATION.
3. NEW WINDOWS SHALL BE RECESSED MOUNTED WITH DRIP CAP & ALL REQ. FLASHING INSTALLED PER MANUFACTURER'S SPECIFICATIONS (TYP.) AND CLEAR GLAZING WITHOUT TINT OR TEXTURE.
4. PER IRC SECTION 301.2.1.2 PROTECTION OF OPENINGS, CONTRACTOR SHALL PROVIDE 1/2" THICK PRECUT WOOD STRUCTURAL PANELS FOR EACH WINDOW COVERING THE EXTERIOR CASING, PROVIDE PREDRILLED ANCHORS FOR FUTURE MOUNTING.
5. NO HALF-SCREENS PERMITTED. PREFABRICATED FULL SCREENS ON NON-STREET-FACING ELEVATIONS ONLY.
6. ALL WINDOW CASING SHALL BE PRIMED & PAINTED 1X WOOD WITH PROFILE MATCHING EXISTING BUILDING STANDARD OR NEW APPROVED BY OWNER PRIOR TO INSTALL. FOR INSTANCES WHERE JAMB CASING MUST BE CUT, CUT ONLY THAT PIECE AND LEAVING HEADER FULL SIZE.

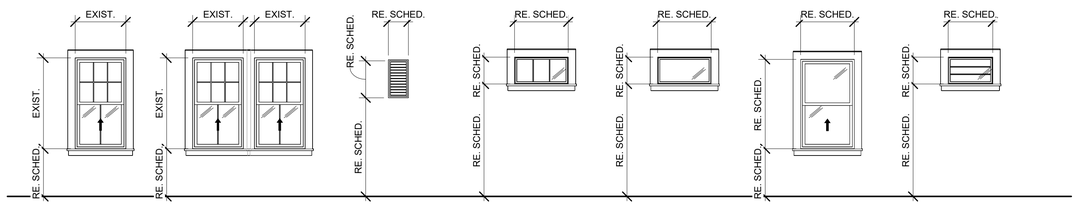

WINDOW TYPE 'A'
6 OVER 2 LITE SINGLE HUNG WINDOW (EXISTING)

WINDOW TYPE 'B'
6 OVER 2 LITE SINGLE HUNG DOUBLE WINDOW (EXISTING)

WINDOW TYPE 'C'
LOUVERED GABLE VENT (MATCH EXISTING)

WINDOW TYPE 'D'
FIXED 3 LITE TRANSOM WINDOW

WINDOW TYPE 'E'
FIXED 1 LITE TRANSOM WINDOW

WINDOW TYPE 'F'
1 OVER 1 SINGLE HUNG WINDOW

WINDOW TYPE 'G'
FIXED 3 HORIZ. LITE GABLE WINDOW (MATCH EXISTING)

WINDOW TYPE 'H'
1 LITE HOPPER WINDOW

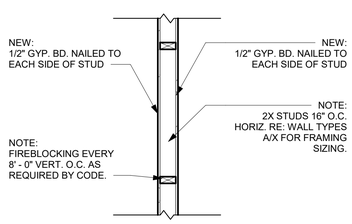

A1
(NEW) INTERIOR 2X4 WALL W/ GYP. @ BOTH SIDES

A2
(NEW) INTERIOR 2X6 WALL W/ GYP. @ BOTH SIDES

A3
(NEW) INTERIOR 2X6 WALL W/ 2 LAYERS GYP. @ ONE SIDE

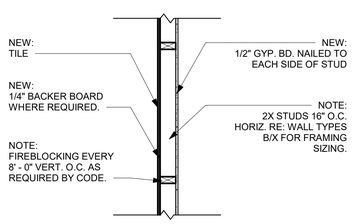

B1
(NEW) INTERIOR 2X4 WALL W/ TILE @ ONE SIDE

B2
(NEW) INTERIOR 2X6 WALL W/ TILE @ ONE SIDE

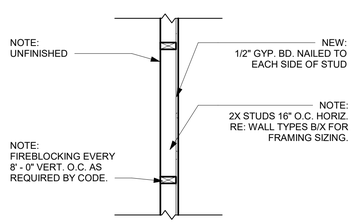

C1
(NEW) INTERIOR 2X4 WALL CHASE

C2
(NEW) INTERIOR 2X4 WALL TYP. 2X4 WOOD ON FLAT CHASE

C3
(NEW) INTERIOR 2X6 WALL CHASE

DOOR SCHEDULE

DOOR TAG	DOOR TYPE	WIDTH	HEIGHT	MATERIAL	EXT. TRIM	INT. TRIM	COUNT	REMARKS
001-1	D	3' - 0"	7' - 0"	WOOD / GLASS	HARDIE	CS-1	1	COORD. PRIVACY FILM OVER GLASS LITES W/ OWNER.
003-1	C	2' - 6"	7' - 0"	SOLID CORE	N/A	CS-1	1	
003-2	G	3' - 0"	7' - 0"	WOOD / GLASS	HARDIE	CS-1	1	CLIENT TO PROVIDE DOOR FROM RICCAS
004-1	J	2' - 6"	3' - 0"	GYPSUM	N/A	CS-1	1	
006-1	C	2' - 6"	7' - 0"	SOLID CORE	N/A	CS-1	1	
006-4	C	2' - 6"	7' - 0"	SOLID CORE	N/A	CS-1	1	
007-1	F	2' - 8"	7' - 0"	WOOD / GLASS	N/A	CS-1	1	SALVAGED DOOR. COORD. SELECTION W/ OWNER.
009-1	H	3' - 10 1/2"	9' - 0"	WOOD	N/A	N/A	1	FLUSH POCKET DOOR. V.I.F. TO MATCH SIZE OF HALLWAY.
110-1	G	2' - 8"	7' - 0"	WOOD / GLASS	HARDIE	CS-1	1	CLIENT TO PROVIDE DOOR FROM RICCAS
112-1	A	2' - 8"	7' - 0"	EXIST.	N/A	CS-1	1	SALVAGED DOOR PANEL RE. D101 FOR EXIST. LOCATION. ADD BLOCKING TO BOTTOM OF EXIST. PANEL TO MAKE 84" TALL.
113-1	A	2' - 8"	7' - 0"	EXIST.	N/A	CS-1	1	SALVAGED DOOR PANEL RE. D101 FOR EXIST. LOCATION. ADD BLOCKING TO BOTTOM OF EXIST. PANEL TO MAKE 84" TALL.
114-1	A	2' - 6"	7' - 0"	EXIST.	N/A	CS-1	1	SALVAGED DOOR PANEL RE. D101 FOR EXIST. LOCATION. ADD BLOCKING TO BOTTOM OF EXIST. PANEL TO MAKE 84" TALL.
115-1	A	2' - 8"	7' - 0"	EXIST.	N/A	CS-1	1	SALVAGED DOOR PANEL RE. D101 FOR EXIST. LOCATION. ADD BLOCKING TO BOTTOM OF EXIST. PANEL TO MAKE 84" TALL.
116-1	C	2' - 6"	7' - 0"	SOLID CORE	N/A	CS-1	1	
117-1	C	2' - 6"	7' - 0"	SOLID CORE	N/A	CS-1	1	
121-1	D	3' - 0"	7' - 8"	WOOD / GLASS	HARDIE	CS-1	1	
122-1	E	3' - 0"	6' - 8"	SCREEN	N/A	CS-1	1	
201-1	O	2' - 6"	5' - 0"	SOLID CORE	N/A	CS-1	1	INSULATED ATTIC ACCESS DOOR
201-2	I	2' - 6"	3' - 0"	SOLID CORE	N/A	CS-1	1	INSULATED ATTIC ACCESS DOOR
202-1	A	2' - 6"	7' - 0"	SOLID CORE	N/A	CS-1	1	SALVAGED DOOR PANEL RE. D101 FOR EXIST. LOCATION. ADD BLOCKING TO BOTTOM OF EXIST. PANEL TO MAKE 84" TALL.
202-2	N	0"	0"				1	
203-1	A	2' - 8"	7' - 0"	EXIST.	N/A	CS-1	1	SALVAGED DOOR PANEL RE. D101 FOR EXIST. LOCATION. ADD BLOCKING TO BOTTOM OF EXIST. PANEL TO MAKE 84" TALL.
203-2	B	2' - 6"	7' - 0"	SOLID CORE	N/A	CS-1	1	
205-1	B	2' - 8"	7' - 0"	SOLID CORE	N/A	CS-1	1	
205-2	B	2' - 6"	7' - 0"	SOLID CORE	N/A	CS-1	1	

Grand total: 25

GENERAL NOTES: DOOR SCHEDULE

1. CONTRACTOR SHALL PROVIDE OWNER WITH ALL DOOR, CASING, & TRIM SPECIFICATIONS FOR APPROVAL PRIOR TO PURCHASE AND INSTALLATION.
2. IF EXTERIOR DOORS ARE MILLED LOCALLY, CONTRACTOR SHALL PROVIDE RIGID WEATHER-STRIPPING & REQ. FLASHING AT ALL EXTERIOR DOOR LOCATIONS. IF EXTERIOR DOORS ARE MANUFACTURED, THEN MANUFACTURER SHALL PROVIDE WEATHER-STRIPPING WITH DOOR UNIT.
3. ALL NEW EXTERIOR LITES SHALL BE TEMPERED, CLEAR GLAZING WITHOUT TINT OR TEXTURE.
4. ALL DOOR CASINGS SHALL BE PRIMED & PAINTED 1X WOOD (TREATED FOR EXTERIOR) WITH PROFILE MATCHING EXISTING BUILDING STANDARD OR NEW APPROVED BY OWNER PRIOR TO INSTALL. FOR INSTANCES WHERE JAMB CASING MUST BE CUT, CUT ONLY THAT PIECE, LEAVING HEADER FULL SIZE.
5. ALL HARDWARE TO BE SELECTED BY OWNER UNLESS OTHERWISE NOTED. CONTRACTOR SHALL COORDINATE WITH OWNER PRIOR TO PURCHASE AND INSTALLATION.
6. CONTRACTOR TO VERIFY PROPOSED DOOR MATCHES EXISTING SIZING AND OVERALL HEAD HEIGHT IN THE FIELD PRIOR TO PURCHASE AND INSTALL.
7. FOR POCKET DOORS, ENSURE THAT FINISH NAILS DO NOT SCRAPE DOOR WHEN FINISHED.

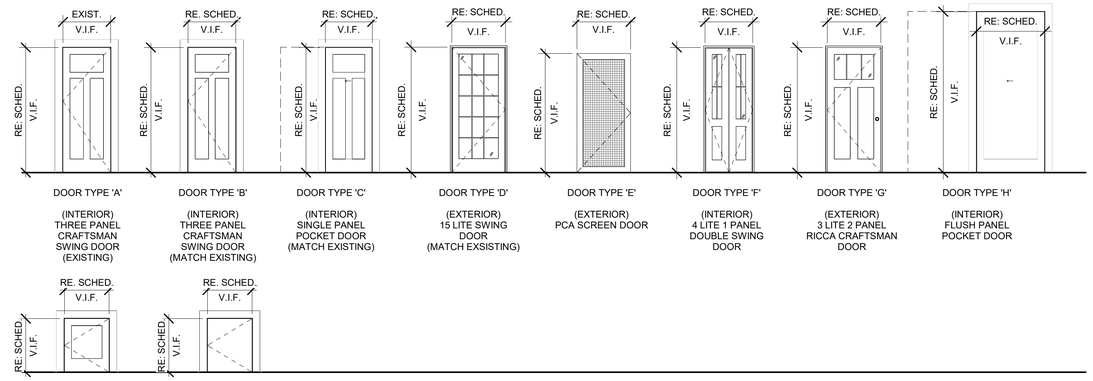

DOOR TYPE 'A'
(INTERIOR) THREE PANEL CRAFTSMAN SWING DOOR (EXISTING)

DOOR TYPE 'B'
(INTERIOR) THREE PANEL CRAFTSMAN SWING DOOR (MATCH EXISTING)

DOOR TYPE 'C'
(INTERIOR) SINGLE PANEL POCKET DOOR (MATCH EXISTING)

DOOR TYPE 'D'
(EXTERIOR) 15 LITE SWING DOOR (MATCH EXSISTING)

DOOR TYPE 'E'
(EXTERIOR) PCA SCREEN DOOR

DOOR TYPE 'F'
(INTERIOR) 4 LITE 1 PANEL DOUBLE SWING DOOR

DOOR TYPE 'G'
(EXTERIOR) 3 LITE 2 PANEL RICCA CRAFTSMAN DOOR

DOOR TYPE 'H'
(INTERIOR) FLUSH PANEL POCKET DOOR

DOOR TYPE 'I'
(INTERIOR) ONE PANEL INSULATED ATTIC ACCESS DOOR

DOOR TYPE 'J'
(INTERIOR) CONCEALED GYP. PANEL SWING DOOR

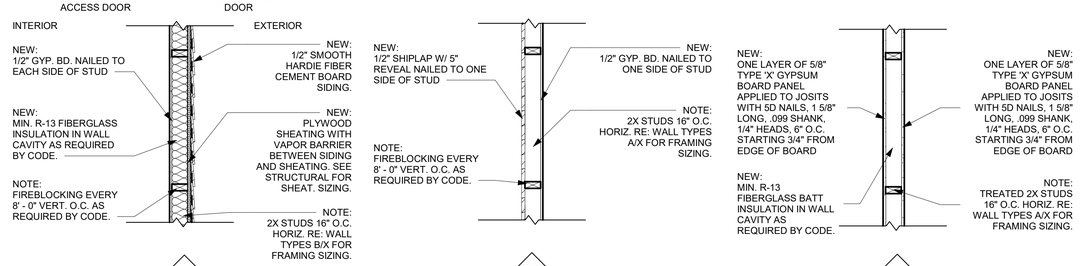

D1
(NEW) EXTERIOR 2X4 WALL W/ HARDIE @ ONE SIDE

D2
(NEW) EXTERIOR 2X6 WALL W/ HARDIE @ ONE SIDE

D3
(NEW) EXTERIOR 2X8 WALL W/ HARDIE @ ONE SIDE & 2X LAYERS OF GYP. @ INT.

D4
(NEW) EXTERIOR 2X6 WALL W/ HARDIE @ ONE SIDE & 2X LAYERS OF TYPE 'X' GYP. @ INT.

E1
(NEW) INTERIOR 2X4 WALL W/ GYP. @ ONE SIDE & 1/2" SHIPLAP AT ONE SIDE

G1
(NEW) INTERIOR 2X4 1-HR RATED EXTERIOR WALL - UL348

G2
(NEW) INTERIOR 2X6 1-HR RATED EXTERIOR WALL - UL348

ADAMICK ARCHITECTURE
3301 CHIPPEWA STREET
NEW ORLEANS, LA 70115
504.322.1220

No.	Description	Date

20 DEC. 2024	CD-100%
16 DEC. 2024	CD-85%
18 NOV. 2024	CD-75%
28 OCT. 2024	DD-3
18 SEP. 2024	DD-2
06 SEP. 2024	DD-1
20 AUG. 2024	SD-3
30 JUL. 2024	SD-2
11 JUL. 2024	SD-1
20 JUN. 2024	EC-1

Project: #2024-19

COOK RESIDENCE RENOVATION & ADDITION

ADDRESS:
1317-1319 ADAMS ST. NEW ORLEANS, LA 70118

DOOR, WINDOW, & WALL SCHEDULE & NOTES

ALEXANDER JAMES ADAMICK
REG. NO. 8148
STATE OF LOUISIANA
REGISTERED ARCHITECT

DATE:	2/12/2025 12:52:04 PM
PROJECT NO.:	2024-19
DRAWING BY:	XXX
CHECKED BY:	AJA
SHEET NO.:	A601
CAD FILE NO: 2024-19\PDF OUT\EC	29 / 39

ROOM MATERIAL/FINISH SCHEDULE ID

ROOM NO.	ROOM NAME	AREA	CEILING HEIGHT	FLOOR	BASE	WALLS	CROWN	CEILING	CASINGS	MILLWORK	REMARKS
000	FRONT PORCH	126 SF	8' - 0"	EXIST CONC. /	N/A /	HARDIE / PT-1	EXIST CROWN - REPLACE IN KIND /	EXIST BEADBOARD /	EXIST WOOD /		
001	UNIT #1 LIVING	236 SF	9' - 0 1/2"	WOOD - EVALUATE AND REPLACE IN KIND IF REQUIRED / STAIN + SEAL	WB-1 / PT-7	NEW GYP. / PT-6, PT-8	CR-1 / PT-7	NEW GYP. / PT-9	CS-1, CS-2 / PT-7		
002	UNIT #1 KITCHEN	125 SF	9' - 0 1/2"	WOOD - EVALUATE AND REPLACE IN KIND IF REQUIRED / STAIN + SEAL	WB-1 / PT-7	NEW GYP, TL-7 / PT-6, PT-8	CR-1 / PT-7	NEW GYP. / PT-9	CS-1, CS-2 / PT-7	CABINETRY	
003	UNIT #1 HALL	87 SF	9' - 0 1/2"	WOOD - EVALUATE AND REPLACE IN KIND IF REQUIRED / STAIN + SEAL	WB-1 / PT-7	NEW GYP. / PT-6, PT-8	CR-1 / PT-7	NEW GYP. / PT-9	CS-1, CS-2 / PT-7		
004	UNIT #1 STORAGE	15 SF	5' - 3"	NEW WOOD / STAIN + SEAL	WB-1 / PT-7	NEW GYP. / PT-6	N/A / N/A	NEW GYP. / PT-9	CS-1 / PT-7		
005	UNIT #1 SIDE ENTRY	12 SF	9' - 0 1/2"	NEW CONC. / N/A	N/A / N/A	HARDIE / PT-1	N/A / N/A	NEW AERITIS BEADBOARD / PT-14	HARDIE / PT-1		
006	UNIT #1 PRIM. BATH	61 SF	9' - 0 1/2"	TL-5 / N/A	TL-6 / N/A	NEW GYP, TL-6 / PT-10	N/A / N/A	NEW GYP. / PT-9	CS-1, CS-2 / PT-7	CABINETRY	
007	UNIT #1 LAUNDRY	22 SF	9' - 0 1/2"	NEW WOOD / STAIN + SEAL	WB-1 / PT-7	NEW GYP. / PT-6	N/A / N/A	NEW GYP. / PT-9	CS-1 / PT-3		
008	UNIT #1 PRIM. CLOS.	48 SF	9' - 0 1/2"	WOOD - EVALUATE AND REPLACE IN KIND IF REQUIRED / STAIN + SEAL	WB-1 / PT-7	NEW GYP. / PT-6	N/A / N/A	NEW GYP. / PT-9	CS-1, CS-2 / PT-7		
009	UNIT #1 PRIM. BED	262 SF	9' - 0 1/2"	WOOD - EVALUATE AND REPLACE IN KIND IF REQUIRED / STAIN + SEAL	WB-1 / PT-7	NEW GYP. / PT-6, PT-8	PT-7	NEW GYP. / PT-9	CS-1, CS-2 / PT-7		
109	UNIT #2 LIVING	282 SF	9' - 0 1/2"	NEW WOOD / STAIN + SEAL	WB-1 / PT-3	NEW GYP. / PT-2	CR-1 / PT-4	NEW GYP. / PT-5	CS-1, CS-2 / PT-3		
110	UNIT #2 DINING	111 SF	9' - 0 1/2"	NEW WOOD / STAIN + SEAL	WB-1 / PT-3	NEW GYP. / PT-2	CR-1 / PT-4	NEW GYP. / PT-5	CS-1, CS-2 / PT-3		
111	UNIT #2 HALL	55 SF	9' - 0 1/2"	NEW WOOD / STAIN + SEAL	WB-1 / PT-3	NEW GYP. / PT-2	CR-1 / PT-4	NEW GYP. / PT-5	CS-1, CS-2 / PT-3		
112	UNIT #2 POWDER	22 SF	9' - 0 1/2"	NEW WOOD / STAIN + SEAL	WP-1 / PT-3	NEW GYP, WP-1 / PT-2	N/A / N/A	NEW GYP. / PT-5	CS-1 / PT-3		
113	UNIT #2 LAUNDRY	22 SF	9' - 0 1/2"	NEW WOOD / STAIN + SEAL	WB-1 / PT-3	NEW GYP. / PT-2	N/A / N/A	NEW GYP. / PT-5	CS-1 / PT-3		
114	UNIT #2 V.C.	13 SF	9' - 0 1/2"	TL-1 / N/A	WB-1 / PT-3	NEW GYP. / PT-2	N/A / N/A	NEW GYP. / PT-5	N/A / PT-3		
115	UNIT #2 PRIM. BED	154 SF	9' - 0 1/2"	NEW WOOD / STAIN + SEAL	WB-1 / PT-3	NEW GYP. / PT-2	CR-1 / PT-4	NEW GYP. / PT-5	CS-1, CS-2 / PT-3		
116	UNIT #2 PRIM. CLOS.	44 SF	9' - 0 1/2"	NEW WOOD / STAIN + SEAL	WB-1 / PT-3	NEW GYP. / PT-2	N/A / N/A	NEW GYP. / PT-5	CS-1 / PT-3		
117	UNIT #2 PRIM. BATH	49 SF	9' - 0 1/2"	TL-1 /	WB-1 / PT-3	NEW GYP. / PT-6	N/A / PT-3	NEW GYP. / PT-5	CS-1, CS-2 / PT-3	CABINETRY	
118	UNIT #2 BAR	8 SF	8' - 0"	NEW WOOD / STAIN + SEAL	N/A / N/A	NEW GYP. / PT-11	N/A / N/A	NEW GYP. / PT-11	N/A / N/A	CABINETRY	
119	UNIT #2 PRIM. SHWR	23 SF	9' - 0 1/2"	TL-1 / N/A	TL-2 / N/A	TL-2 / N/A	N/A / N/A	NEW GYP. / PT-5	CS-2 / PT-3		
120	UNIT #2 KITCHEN	318 SF	9' - 0 1/2"	NEW WOOD / STAIN + SEAL	WB-1 / PT-3	NEW GYP. / PT-2, WP-1	CR-1 / PT-4	NEW GYP. / PT-5	CS-1, CS-2 / PT-3	CABINETRY	
121	UNIT #2 DEN	155 SF	9' - 0 1/2"	NEW WOOD / STAIN + SEAL	WB-1 / PT-3	NEW GYP. / PT-2	CR-1 / PT-4	NEW GYP. / PT-5	CS-1, CS-2 / PT-3		
122	UNIT #2 REAR PORCH	206 SF	VAULTED	AERITIS / N/A	N/A / N/A	HARDIE, SCREEN / PT-1	N/A / N/A	AERITIS BEADBOARD / PT-12	HARDIE / PT-13		CATHERDRAL BEADED PLY. CLG. FOR BDB APEARANCE.
200	STAIRS	12 SF	6' - 8"	NEW WOOD TREADS / STAIN + SEAL		NEW GYP. / PT-2	N/A / N/A	NEW GYP. / PT-5	N/A / N/A		
201	LANDING	210 SF	9' - 0"	NEW WOOD / STAIN + SEAL	WB-1 / PT-7	NEW GYP. / PT-2	CR-1 / PT-3	NEW GYP. / PT-9	CS-1, CS-2 / PT-3		
202	GUEST BATH	70 SF	9' - 0"	TL-3 / N/A	WP-2 / STAIN + SEAL	NEW GYP, WP-2, TL-8 / PT-6	N/A / PT-3	NEW GYP. / PT-5	CS-1, CS-2 / PT-7		
203	BEDROOM 1	110 SF	9' - 0"	NEW WOOD / STAIN + SEAL	WB-1 / PT-7	NEW GYP. / PT-2	CR-1 / PT-3	NEW GYP. / PT-9	CS-1, CS-2 / PT-3		
204	CLOSET 1	8 SF	9' - 0"	NEW WOOD / STAIN + SEAL	WB-1 / PT-3	NEW GYP. / PT-6	N/A / N/A	NEW GYP. / PT-5	CS-1 / PT-3		
205	BEDROOM 2	111 SF	9' - 0"	NEW WOOD / STAIN + SEAL	WB-1 / PT-7	NEW GYP. / PT-2	CR-1 / PT-3	NEW GYP. / PT-9	CS-1, CS-2 / PT-3		
206	CLOSET 2	8 SF	9' - 0"	NEW WOOD / STAIN + SEAL	WB-1 / PT-3	NEW GYP. / PT-6	N/A / N/A	NEW GYP. / PT-5	CS-1 / PT-3		

FINISH STANDARDS

CLEAN
1. REMOVE ALL OIL AND DIRT.

ENCAPSULATE & PAINT (PT)
1. REMOVE ANY EXISTING FLAKING PAINT OR PROTRUSIONS, TO MAKE SMOOTH.
2. PRIME WITH "FIBERLOCK" L-B-C TYPE 1-INTERIOR AND (2) COATS FINISH.

SAND & STAIN (STN)
1. FILL ALL NAIL HOLES AND SAND SMOOTH.
2. PROVIDE TWO (2) COATS OF OIL-BASED STAIN AND ONE (1) COAT OF WATER-BASED/OIL-BASED POLYURETHANE WITH SCREENING BETWEEN EACH COAT.

PAINT (PT)
1. PROVIDE ONE (1) COAT OF PRIMER/SEALER AND THREE (3) COATS OF PAINT.
2. PROVIDE SANDING AS REQUIRED BETWEEN COATS.
3. PROVIDE FINISHES ACCORDING TO THE PAINT SCHEDULE.

PATCH
1. PATCH EXISTING FINISH AS REQUIRED TO MAKE "PAINT READY."

PATCH (FLOORS)
1. PATCH EXISTING SUBSTRATE/SUBFLOOR/FLOOR AS REQUIRED TO ACCEPT SPECIFIED FLOOR FINISH.

PLASTER
1. PROVIDE APPLICATION CONSISTENT WITH USE OF BLUE BOARD. CONTRACTOR TO PROVIDE FINISH COLOR SAMPLES TO ARCHITECT/OWNER FOR REVIEW.

SCREEN & STAIN (STN)
1. SCREEN FLOORS TO REMOVE EXISTING POLYURETHANE AND STAIN.
2. BUFF SMOOTH.
3. PROVIDE TWO (2) COATS OF OIL-BASED STAIN AND ONE (1) COAT OF WATER-BASED/OIL-BASED POLYURETHANE WITH SCREENING BETWEEN EACH COAT.

SEAL (STONE)
1. PROVIDE NON-DARKENING PENETRATING STONE SEALER. CONSULT STONE SUPPLIER FOR APPROVED SEALERS.
2. PROVIDE SAMPLE OF STONE SEALED FOR APPROVAL BY ARCHITECT.

SEAL (BUTCHERBLOCK)
1. PROVIDE THREE (3) COATS WATER-BASED POLYURETHANE WITH SATIN FINISH.

SKIMCOAT
1. REMOVE LOOSE PAINT AND PLASTER, AS REQUIRED, TO COVER SUBSTRATE WITH A COATING OF A MIXTURE OF PLASTER & DRYWALL COMPOUND, AS REQUIRED, FOR A SMOOTH CONTINUOUS SURFACE.
2. SAND LIGHTLY, AS REQUIRED, FOR "PAINT READY SURFACE."

STRIP & FINISH (A)
1. CHEMICALLY STRIP ANY REMAINING FINISH.
2. APPLY CHEMICAL WASH TO REMOVE AS MUCH WAX RESIDUE AS POSSIBLE.
3. SAND ALL SURFACES TO REMOVE AS MUCH COLORATION AND WAX WITHOUT AFFECTING THE INTEGRITY OF THE EXISTING MILLWORK. THIS SANDING WILL ALSO REMOVE SOME OF THE MORE MINOR SURFACE IMPERFECTIONS, SCRATCHES AND DENTS.
4. APPLICATION OF STAIN OR DYE TO ALL MILLWORK, FOLLOWED BY MULTIPLE COATS OF SHELLAC, IN AN OPEN PORE FRENCH POLISH TECHNIQUE. SHELLAC WILL BE RUBBED OUT BETWEEN COATS AND A FINAL WAX COAT APPLIED.

STRIP & FINISH (B)
1. CHEMICALLY STRIP ANY REMAINING FINISH.
2. APPLY CHEMICAL WASH TO REMOVE AS MUCH WAX RESIDUE AS POSSIBLE.
3. SAND ALL SURFACES TO REMOVE AS MUCH COLORATION AND WAX WITHOUT AFFECTING THE INTEGRITY OF THE EXISTING MILLWORK. THIS SANDING WILL ALSO REMOVE SOME OF THE MORE MINOR SURFACE IMPERFECTIONS, SCRATCHES AND DENTS.
4. APPLICATION OF STAIN OR DYE TO ALL MILLWORK, FOLLOWED BY TWO (2) COATS OF SATIN POLYURETHANE.

STRIP & PAINT (PT)
1. COMPLETELY REMOVE PAINT TO SUBSTRATE WITH PEEL-AWAY ONE (1) CHEMICAL STRIPPER FOLLOWED BY PEEL-AWAY NEUTRALIZING SOLUTION.
2. WASH ALL NEWLY STRIPPED SURFACES WITH A LEAD-SEQUESTERING AGENT SUCH AS "LEDIZOLV" OR WITH A TRI-PHOSPHATE SOLUTION.
3. APPLY PRIMER AND TWO (2) COATS FINISH.

GROUT (GT)
1. ARCHITECT WILL PROVIDE GROUT TYPE AND COLOR, AT REQUEST OF GENERAL CONTRACTOR, DURING CONSTRUCTION.

GENERAL NOTES: ROOM MATERIAL/FINISH SCHEDULE

1. GC TO INSPECT EXIST. FINISHES THROUGHOUT AND REUSE EXIST. MATERIALS AT WALLS, CEILINGS, FLOORING, AND LINEAR TRIM WHERE POSSIBLE.
2. OWNER TO PROVIDE MATERIAL & FINISH SELECTIONS.
3. PROVIDE LEVEL 5 FINISH GYP. AT REQ. LOCATIONS FOR WALLPAPER APPLICATION AND HIGH-GLOSS PAINTS.
4. GC TO PROVIDE LINEAR TRIM & MOLDING MATERIALS & PROFILES TO ARCHITECT/OWNER FOR REVIEW AND APPROVAL PRIOR TO PURCHASE AND INSTALLATION, INCLUDING WINDOW AND DOOR CASINGS, BASEBOARDS, PICTURE RAILS, CROWNS, ETC.
5. GC TO COORDINATE ALL INTERIOR & EXTERIOR PAINT SELECTIONS WITH OWNER MIN. ONE (1) MONTH PRIOR TO PAINTING. GC TO PROVIDE TWO (2) SAMPLES OF PAINT COLORS, STAIN COLORS, AND POLY FINISHES PER SELECTION FOR OWNER APPROVAL IN FIELD.
6. REFER TO ROOM MATERIAL/FINISH SCHEDULE, INTERIOR FINISH PLANS, AND INTERIOR ELEVATIONS FOR LOCATIONS AND DETAILS OF FINISHES & SELECTIONS.
7. GC TO VERIFY ALL QUANTITIES, SQ FT, DIMENSIONS, AND REQUIRED PARTS FOR SPECIFIED SELECTIONS PRIOR TO PURCHASE AND INSTALLATION. GC RESPONSIBLE TO REPORT ANY DISCREPANCIES TO ARCHITECT.
8. GC TO VERIFY THE FOLLOWING ITEMS IN FIELD WITH OWNER/ARCHITECT PRIOR TO INSTALLATION OR FABRICATION:
   A. LOCATIONS OF PLUMBING ROUGH-INS AND TRIM;
   B. LOCATIONS AND SIZES OF WALL NICHES AT SHOWERS AND TUBS;
   C. TYPES AND LOCATIONS OF BATHROOM HARDWARE ACCESSORIES, INCLUDING TOWEL BARS, RINGS, HOOKS, AND TISSUE HOLDERS;
   D. LOCATIONS OF RECEPTACLES AND SWITCHES AT MILLWORK, BACKSPLASHES, APPLIANCES, FIREPLACES, ETC.
   E. TILE LAYOUT/PATTERNS, GROUT COLORS AND SPACING;
   F. LOCATIONS AND HIEHGTS OF MIRRORS, HANGING LIGHT FIXTURES, AND WALL SCONCES;
   G. FIREPLACE INSERT LOCATIONS AND SIZES; FIREPLACE SURROUNDS AND MANTLES.

   CHANGES OR ERRORS THAT RESULT FROM FAILURE TO CONFORM TO THESE ITEMS PRIOR TO INSTALLATION/FABRICATION SHALL BE AT NO EXPENSE TO OWNER OR ARCHITECT.
9. GC TO PROVIDE BLOCKING OR ANCHORS FOR ALL WALL-HUNG CABINETS, MIRRORS, FLOATING SHELVES, AND OTHER WALL-MOUNTED ITEMS AT REQUIRED LOCATIONS TO ENSURE SECURITY OF ITEMS.
10. ALL SHOWER BENCHES TO BE FINISHED WITH STONE OR SOLID SURFACE TOP, UNLESS OTHERWISE NOTED, AND SLOPED TO DRAIN. COORDINATE FINISH SELECTIONS WITH ARCHITECT/OWNER PRIOR TO INSTALLATION.
11. GC RESPONSIBLE FOR EXECUTING LEVEL OF FINISHES/SELECTIONS AS SPECIFIED. SHALL SUBSTITUTIONS OR ALTERNATES BE REQUIRED, CONTRACTOR SHALL SUBMIT WRITTEN REQUESTS TO OWNER/ARCHITECT, ACCOMPANIED BY PHYSICAL SAMPLE WHEN POSSIBLE, FOR APPROVAL PRIOR TO PURCHASE AND INSTALLATION.

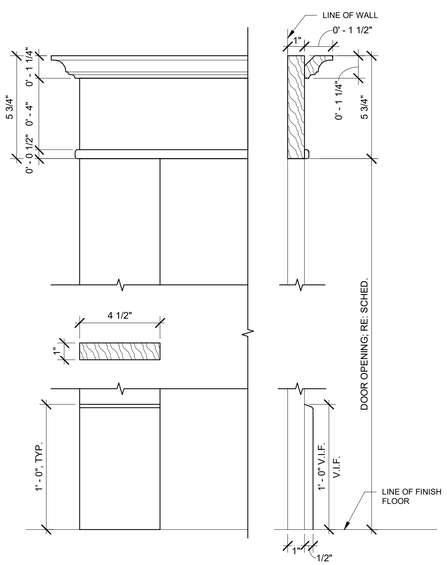

1 INT DETAIL - DOOR CASING (CS-1)
3" = 1'-0"

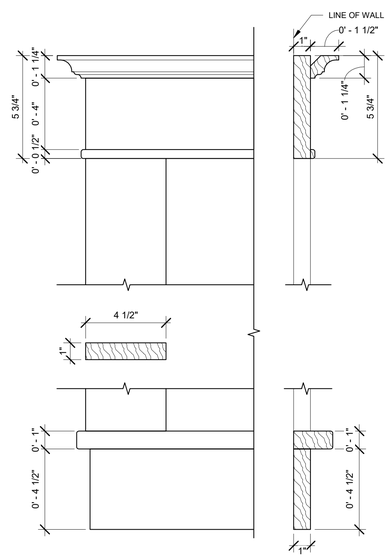

2 INT DETAIL - WINDOW CASING (CS-2)
3" = 1'-0"

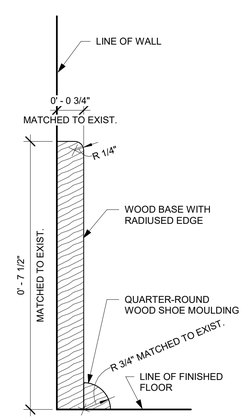

3 INT DETAIL - WALL BASE (WB-1)
6" = 1'-0"

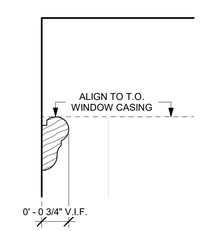

4 INT DETAIL - PICTURE RAIL (PR-1)
6" = 1'-0"

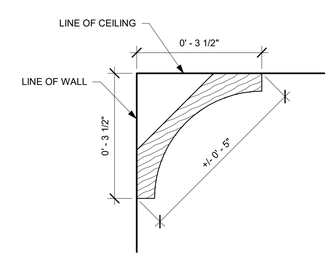

5 INT DETAIL - CROWN
6" = 1'-0"

ADAMICK ARCHITECTURE
3301 CHIPPEWA STREET
NEW ORLEANS, LA 70115
504.322.1220

No.	Description	Date

20 DEC. 2024	CD-100%
16 DEC. 2024	CD-85%
18 NOV. 2024	CD-75%
28 OCT. 2024	DD-3
18 SEP. 2024	DD-2
06 SEP. 2024	DD-1
20 AUG. 2024	SD-3
30 JUL. 2024	SD-2
11 JUL. 2024	SD-1
20 JUN. 2024	EC-1

Project: #2024-19

COOK RESIDENCE RENOVATION & ADDITION

ADDRESS:
1317-1319 ADAMS ST. NEW ORLEANS, LA 70118

ROOM MATERIAL/FINISH SCHEDULE & NOTES, INTERIOR DETAILS

ALEXANDER JAMES ADAMICK
REG. NO. 8148
STATE OF LOUISIANA
REGISTERED ARCHITECT

DATE: 2/12/2025 12:52:05 PM	
PROJECT NO.:	2024-19
DRAWING BY:	CH
CHECKED BY:	AJA
SHEET NO.:	A800
CAD FILE NO: 2024-19\PDF OUT\EC	30/39

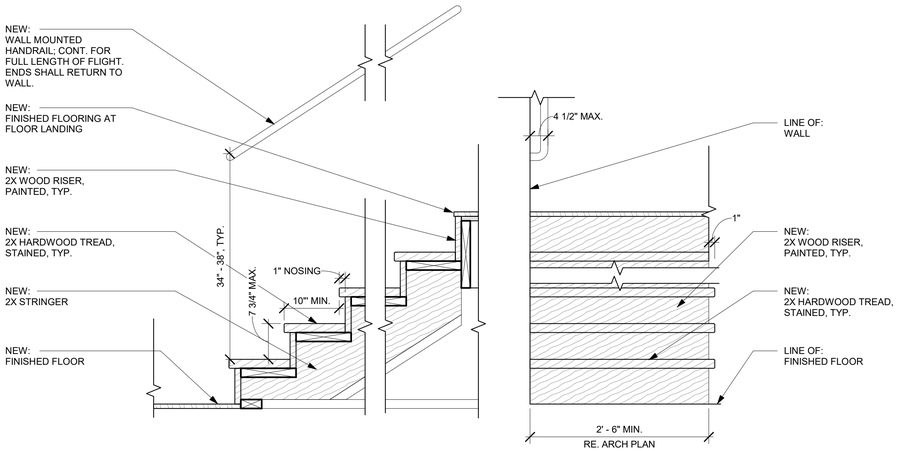

1 INT DETAIL - STAIR RISERS AND TREADS
1" = 1'-0"

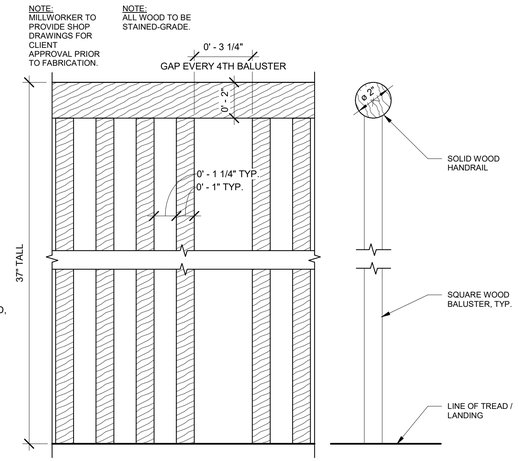

2 INT DETAIL - WOOD GUARDRAIL AND BALUSTERS
3" = 1'-0"

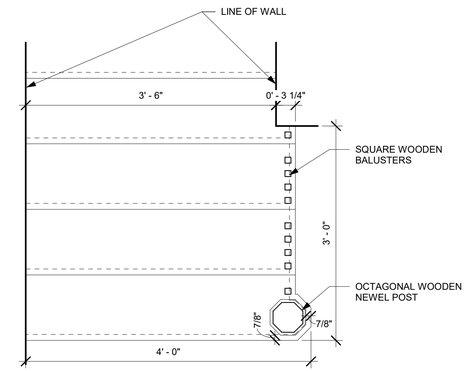

3 INT DETAIL - STAIR TREADS AND BALUSTERS
1" = 1'-0"

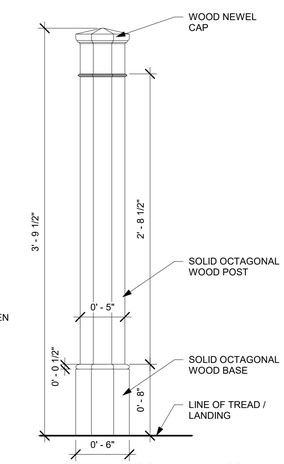

4 INT DETAIL - WOOD NEWEL POST
1 1/2" = 1'-0"

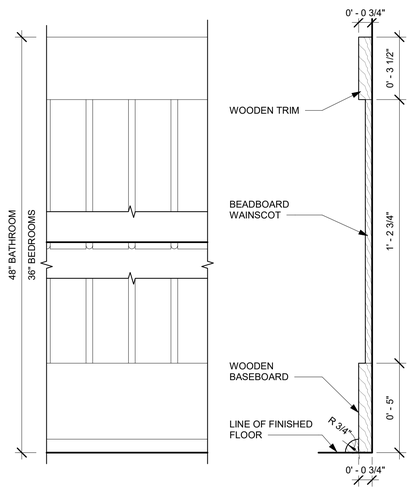

5 INT DETAIL - WALL PANELING (WP-1)
3" = 1'-0"

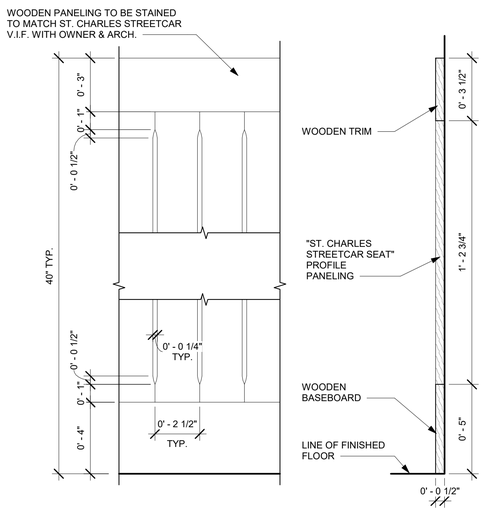

6 INT DETAIL - WALL PANELING (WP-2)
3" = 1'-0"

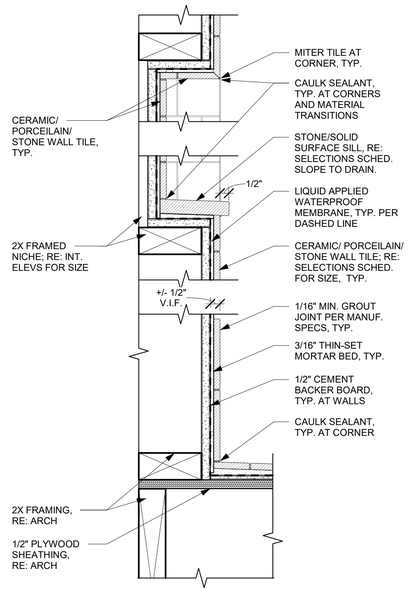

7 INT DETAIL - SHOWER NICHE & WALL TILE
3" = 1'-0"

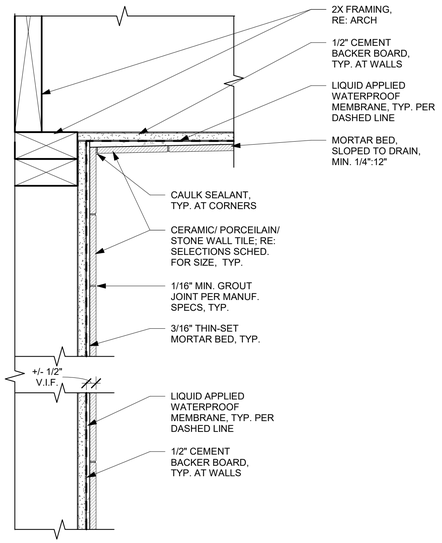

8 INT DETAIL - SHOWER CEILNG
3" = 1'-0"

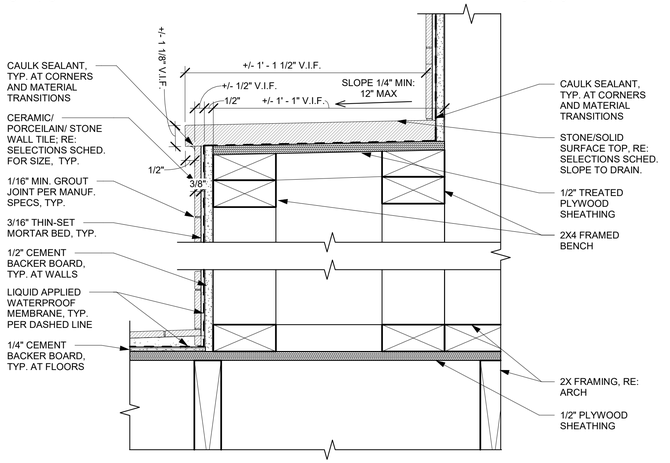

9 INT DETAIL - SHOWER BENCH
3" = 1'-0"

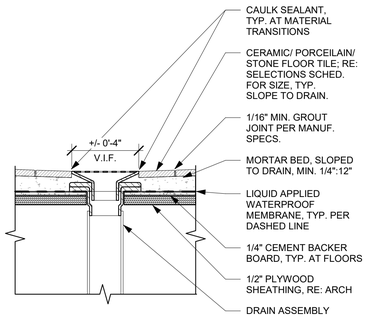

10 INT DETAIL - SHOWER DRAIN
3" = 1'-0"

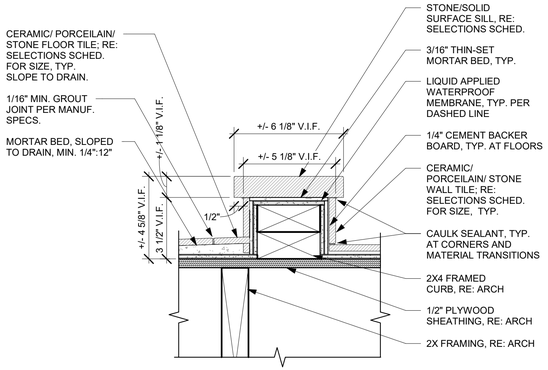

11 INT DETAIL - SHOWER CURB & FLOOR TILE
3" = 1'-0"

ADAMICK ARCHITECTURE
3301 CHIPPEWA STREET
NEW ORLEANS, LA 70115
504.322.1220

No.	Description	Date

20 DEC. 2024	CD-100%
16 DEC. 2024	CD-85%
18 NOV. 2024	CD-75%
28 OCT. 2024	DD-3
18 SEP. 2024	DD-2
06 SEP. 2024	DD-1
20 AUG. 2024	SD-3
30 JUL. 2024	SD-2
11 JUL. 2024	SD-1
20 JUN. 2024	EC-1

Project: #2024-19

COOK RESIDENCE RENOVATION & ADDITION

ADDRESS:
1317-1319 ADAMS ST. NEW ORLEANS, LA 70118

INTERIOR DETAILS

LICENSED ARCHITECT ALEXANDER JAMES ADAMICK REG. NO. 8148 STATE OF LOUISIANA

DATE:	2/12/2025 12:52:06 PM
PROJECT NO.:	2024-19
DRAWING BY:	CH
CHECKED BY:	AJA
SHEET NO.:	A801
CAD FILE NO: 2024-19\PDF OUT\EC	31/39

SHEET - KEYNOTES	
Key Value	Keynote Text
ID-01	NEW WOOD THRESHOLD TO MATCH WOOD FLOORING, TYP. BETWEEN INTERIOR FLOOR MATERIAL TRANSITIONS
ID-02	NEW STONE COUNTERTOP AT THIS LOCATION; GC TO COORD. SELECTIONS W/ OWNER & VENDOR AS REQ.
ID-03	NEW GRANITE COUNTERTOP AT THIS LOCATION; GC TO COORD. SELECTIONS W/ OWNER & VENDOR AS REQ.
ID-04	NEW MILLWORK; GC TO COORD. SELECTIONS W/ OWNER & VENDOR AS REQ.
ID-05	NEW FRAMED HOOD COVER AT THIS LOCATION; GC TO COORD. SELECTION W/ OWNER & VENDOR AS REQ.
ID-06	NEW APPLIANCES AT THIS ROOM RE. MEP PLAN
ID-07	NEW PLUMBING FIXTURES AT THIS ROOM RE. MEP PLAN
ID-08	NEW BATHROOM ACCESSORIES & MIRROR AT THIS ROOM UNLESS NOTED OTHERWISE. / RE. SELECT. SCHED. FOR BATHROOM ACCESSORIES & MIRROR. TYP.)
ID-09	RE. ROOM SCHED. FOR WALL FINISHES.
ID-10	NEW FRAMELESS GLASS SHOWER ENCLOSURE & DOOR W/ FIXED GLASS PANEL; GC TO COORD. CURB & WALL DESIGN W/ OWNER
ID-11	NEW FRAMED SHOWER BENCH W/ STONE TOP; SLOPED TO DRAIN 1/4" OVER 1' MIN.; GC TO COORD. SIZE, LOCATION, & SELECTIONS W/ OWNER & VENDORS AS REQ.
ID-12	NEW SHOWER NICHE W/ STONE SILL; SLOPED TO DRAIN 1/4" OVER 1' MIN.; RE. ID
ID-13	PROVIDE SEPARATE VALVES FOR EACH SHOWER FAUCET; GC TO COORD. SELECTIONS W/ OWNER & VENDORS.
ID-14	NEW BRACKET SUPPORTED WOOD SHELVES; PROVIDE WALL BLOCKING AS REQ. GC TO COORD. LAYOUT W/ OWNER.
ID-15	TILE FLOORING, THIS ROOM; GROUT PER ID FINISH STANDARDS.
ID-16	TILE AT WALLS THIS ROOM, SEE INT. ELEVATIONS FOR HEIGHT; PROVIDE TILE TRIM WHERE REQ.; GROUT PER ID FINISH STANDARDS
ID-17	TILE BACKSPLASH AT THIS LOCATION, SEE INT. ELEVATIONS FOR HEIGHT; PROVIDE TILE TRIM WHERE REQ.; GROUT PER ID FINISH STANDARDS
ID-18	RE. ROOM MAT./FINISH SCHED. FOR LINEAR TRIM MATERIALS & FINISHES THROUGHOUT.

SHEET - KEYNOTES	
Key Value	Keynote Text
ID-19	CUSTOM ISLAND MILLWORK PIECE; COORDINATE SHOP DRAWINGS WITH ARCH. AND OWNER
ID-21	WOODEN BEADBOARD WAINSCOT THIS ROOM, SEE ID FINISH DETAILS;
ID-22	CONCEALED SHELVES BEHIND WAINSCOT. DOOR PANELS TO BE CONCEALED FRENCH DOORS ON PIANO HINGES IN BEADBOARD.
ID-23	NEW WOOD TREADS W/ PAINTED WOOD RISERS, TYP. THIS STAIR; RE DTL 1/A801
ID-24	TREADS 1-4 TO BE CUSTOM PROFILE RE. DTL 3/A801
ID-25	NEW SINGLE HANGING ROD & SHELF AT THIS LOCATION; GC TO COORD. LAYOUT, HEIGHT, & SPACING W/ OWNER
ID-26	PARTIAL HEIGHT WALL TO 5'-6" A.F.F.
ID-27	FOR SCONCE SELECTION, GC TO COORD. W/ OWNER; ELECTRICAL ROUGH-IN HEIGHT TO BE COORDINATED IN FIELD W/ OWNER + ARCH.
ID-28	EXISTING MANTLE TO BE SANDED AND RE-STAINED
ID-29	GC TO DO EXPLORATORY WORK AT FIREPLACE TO DETERMINE IF ORIGINAL BRICK IS PRESENT AND SALVAGEABLE; COORD. W/ OWNER AS REQ.
ID-31	WOODEN HANDRAIL THIS LOCATION; SEE DTL 2/A801
ID-32	GC TO WORK WITH OWNER & VENDOR TO COORDINATE BACKSPLASH TILE PATTERN THIS LOCATION
ID-33	PAINT COLOR THIS AREA TO MATCH FINAL CABINET SELECTION COLOR; GC TO COORD. WITH OWNER, VENDOR, & ARCH.
ID-34	WALLPAPER SELECTION THIS AREA TO BE COORD. WITH OWNER & ARCH.
ID-35	GC TO COORD. WITH OWNER & ARCH. TO ENSURE THAT OPENING IN CABINET WALL IS ADEQUATELY SIZED FOR FINAL FRIDGE SELECTION
ID-38	WINDOW JAMB AT THIS LOCATION TO PROTRUDE TO ALIGN WITH FACE OF TILE; GC TO COORD. WITH OWNER FOR TILE THICKNESS
ID-39	STAINLESS STEEL PANEL BEHIND RANGE, THIS LOCATION
ID-40	ALL CASEWORK TO BE PUSH OPEN & SOFT CLOSE HARDWARE, THIS KITCHEN
ID-41	VERIFY CLEARANCES FOR OVEN & DISHWASHER BEFORE ORDERING. CONTACT ARCH. FOR ANY DISCREPANCIES.
ID-43	FOLLOW TILE PATTERNS EXACTLY, THIS BATHROOM
ID-44	SALVAGED MILLWORK RE. D101 FOR EXISTING LOCATION
ID-48	SOLID END PANEL BETWEEN FRIDGE AND CABINETS FROM FLOOR TO CROWN MOULDING
ID-50	NEW WOODEN COUNTERTOP AT THIS LOCATION; GC TO COORD. SELECTIONS W/ OWNER & VENDOR AS REQ.
ID-51	NEW STAINLESS STEEL COUNTERTOP AT THIS LOCATION; GC TO COORD. SELECTIONS W/ OWNER & VENDOR AS REQ.
ID-52	CUSTOM BUILT IN MEDICINE CABINET MILLWORK

GENERAL NOTES: INTERIOR FINISH PLAN

1. RE: INTERIOR SELECTIONS SCHEDULE A800 FOR MATERIAL & FINISH SELECTIONS.
2. PROVIDE WOOD THRESHOLDS BETWEEN FLOOR MATERIAL TRANSITIONS TO MATCH WOOD FLOORING, TYP., UNLESS OTHERWISE NOTED.
3. GC TO PROVIDE PROTECTION FOR ALL NEW AND EXIST. FLOORING, APPLIANCES, MILLWORK, STONE, & COUNTERTOPS FOR THE DURATION OF CONSTRUCTION. ALL NEW & EXIST. APPLIANCES ON SITE TO HAVE CARDBOARD UNDERNEATH. GC SHALL FIX OR REPLACE ANY DAMAGED SELECTIONS, FINISHES, AND FLOORING THROUGH SUBSTANTIAL COMPLETION OF THE PROJECT AT NO EXPENSE TO OWNER.
4. GC TO PROVIDE BLOCKING FOR FUTURE ADA GRAB BARS IN ALL NEW AND RENOVATED BATHROOMS AT TOILETS AND SHOWERS PER ADA STANDARDS, TYP.

1 INT. FINISH PLAN - FIRST FLOOR
1/4" = 1'-0"

ADAMICK ARCHITECTURE
3301 CHIPPEWA STREET
NEW ORLEANS, LA 70115
504.322.1220

No.	Description	Date

20 DEC. 2024	CD-100%
16 DEC. 2024	CD-85%
18 NOV. 2024	CD-75%
28 OCT. 2024	DD-3
18 SEP. 2024	DD-2
06 SEP. 2024	DD-1
20 AUG. 2024	SD-3
30 JUL. 2024	SD-2
11 JUL. 2024	SD-1
20 JUN. 2024	EC-1

Project: #2024-19

COOK RESIDENCE RENOVATION & ADDITION

ADDRESS:
1317-1319 ADAMS ST. NEW ORLEANS, LA 70118

INTERIOR FIRST FLOOR FINISH PLAN & NOTES

ALEXANDER JAMES ADAMICK
REG. NO. 8148
STATE OF LOUISIANA
REGISTERED ARCHITECT

DATE:	2/12/2025 12:52:16 PM
PROJECT NO.:	2024-19
DRAWING BY:	CH
CHECKED BY:	AJA
SHEET NO.:	A802
CAD FILE NO: 2024-19\PDF OUT\EC	32/39

SHEET - KEYNOTES	
Key Value	Keynote Text
ID-01	NEW WOOD THRESHOLD TO MATCH WOOD FLOORING, TYP. BETWEEN INTERIOR FLOOR MATERIAL TRANSITIONS
ID-03	NEW GRANITE COUNTERTOP AT THIS LOCATION; GC TO COORD. SELECTIONS W/ OWNER & VENDOR AS REQ.
ID-04	NEW MILLWORK; GC TO COORD. SELECTIONS W/ OWNER & VENDOR AS REQ.
ID-07	NEW PLUMBING FIXTURES AT THIS ROOM RE. MEP PLAN
ID-08	NEW BATHROOM ACCESSORIES & MIRROR AT THIS ROOM UNLESS NOTED OTHERWISE. / RE. SELECT. SCHED. FOR BATHROOM ACCESSORIES & MIRROR. TYP.)
ID-09	RE. ROOM SCHED. FOR WALL FINISHES.
ID-12	NEW SHOWER NICHE W/ STONE SILL; SLOPED TO DRAIN 1/4" OVER 1' MIN.; RE. ID
ID-13	PROVIDE SEPARATE VALVES FOR EACH SHOWER FAUCET; GC TO COORD. SELECTIONS W/ OWNER & VENDORS.
ID-21	WOODEN BEADBOARD WAINSCOT THIS ROOM, SEE ID FINISH DETAILS;
ID-23	NEW WOOD TREADS W/ PAINTED WOOD RISERS, TYP. THIS STAIR; RE DTL 1/A801
ID-25	NEW SINGLE HANGING ROD & SHELF AT THIS LOCATION; GC TO COORD. LAYOUT, HEIGHT, & SPACING W/ OWNER
ID-27	FOR SCONCE SELECTION, GC TO COORD. W/ OWNER; ELECTRICAL ROUGH-IN HEIGHT TO BE COORDINATED IN FIELD W/ OWNER + ARCH.
ID-30	WOODEN "STREETCAR" WAINSCOT THIS ROOM; SEE DTL 6/A801
ID-45	MILLWORK TO HAVE ADJUSTABLE SHELVES ON PEGS
ID-46	LINEN CLOSET TO BE CUSTOM BUILT IN CASEWORK; TO HAVE PUSH OPEN & SOFT CLOSE HARDWARE
ID-47	CONCEALED ATTIC ACCESS BEHIND WAINSCOT. DOOR PANELS TO BE CONCEALED FRENCH DOORS ON PIANO HINGES IN BEADBOARD.

GENERAL NOTES: INTERIOR FINISH PLAN

1. RE: INTERIOR SELECTIONS SCHEDULE A800 FOR MATERIAL & FINISH SELECTIONS.
2. PROVIDE WOOD THRESHOLDS BETWEEN FLOOR MATERIAL TRANSITIONS TO MATCH WOOD FLOORING, TYP., UNLESS OTHERWISE NOTED.
3. GC TO PROVIDE PROTECTION FOR ALL NEW AND EXIST. FLOORING, APPLIANCES, MILLWORK, STONE, & COUNTERTOPS FOR THE DURATION OF CONSTRUCTION. ALL NEW & EXIST. APPLIANCES ON SITE TO HAVE CARDBOARD UNDERNEATH. GC SHALL FIX OR REPLACE ANY DAMAGED SELECTIONS, FINISHES, AND FLOORING THROUGH SUBSTANTIAL COMPLETION OF THE PROJECT AT NO EXPENSE TO OWNER.
4. GC TO PROVIDE BLOCKING FOR FUTURE ADA GRAB BARS IN ALL NEW AND RENOVATED BATHROOMS AT TOILETS AND SHOWERS PER ADA STANDARDS, TYP.

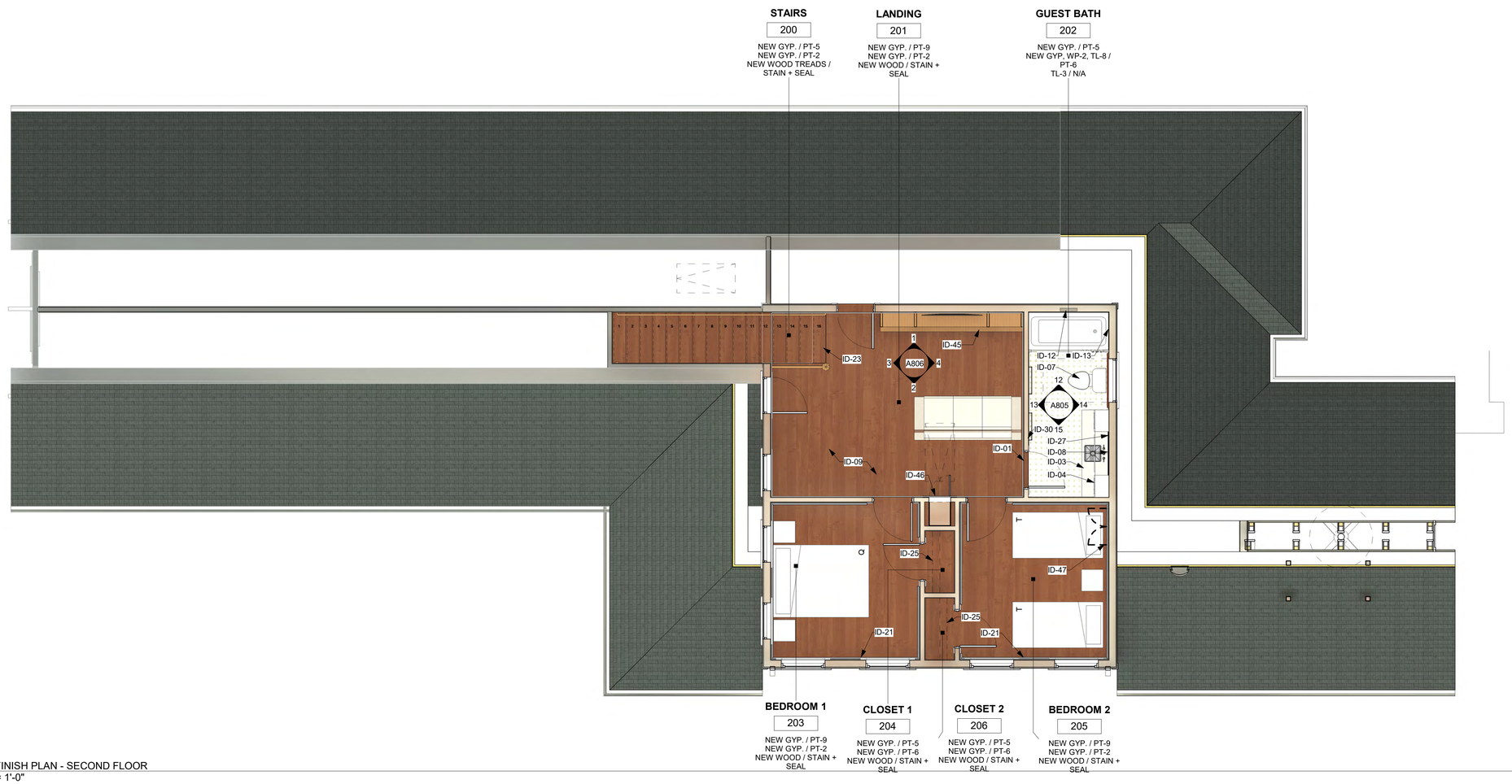

1 INT. FINISH PLAN - SECOND FLOOR
1/4" = 1'-0"

ADAMICK ARCHITECTURE
3301 CHIPPEWA STREET
NEW ORLEANS, LA 70115
504.322.1220

No.	Description	Date

20 DEC. 2024	CD-100%
16 DEC. 2024	CD-85%
18 NOV. 2024	CD-75%
28 OCT. 2024	DD-3
18 SEP. 2024	DD-2
06 SEP. 2024	DD-1
20 AUG. 2024	SD-3
30 JUL. 2024	SD-2
11 JUL. 2024	SD-1
20 JUN. 2024	EC-1

Project: #2024-19

COOK RESIDENCE RENOVATION & ADDITION

ADDRESS:
1317-1319 ADAMS ST. NEW ORLEANS, LA 70118

INTERIOR SECOND FLOOR FINISH PLAN & NOTES

ALEXANDER JAMES ADAMICK REG. NO. 8148 STATE OF LOUISIANA REGISTERED ARCHITECT

DATE:	2/12/2025 12:52:20 PM
PROJECT NO.:	2024-19
DRAWING BY:	CH
CHECKED BY:	AJA
SHEET NO.:	A803
CAD FILE NO: 2024-19\PDF OUT\EC	33/39

SHEET - KEYNOTES	
Key Value	Keynote Text
ID-02	NEW STONE COUNTERTOP AT THIS LOCATION; GC TO COORD. SELECTIONS W/ OWNER & VENDOR AS REQ.
ID-04	NEW MILLWORK; GC TO COORD. SELECTIONS W/ OWNER & VENDOR AS REQ.
ID-05	NEW FRAMED HOOD COVER AT THIS LOCATION; GC TO COORD. SELECTION W/ OWNER & VENDOR AS REQ.
ID-06	NEW APPLIANCES AT THIS ROOM RE. MEP PLAN
ID-07	NEW PLUMBING FIXTURES AT THIS ROOM RE. MEP PLAN
ID-17	TILE BACKSPLASH AT THIS LOCATION, SEE INT. ELEVATIONS FOR HEIGHT; PROVIDE TILE TRIM WHERE REQ.; GROUT PER ID FINISH STANDARDS
ID-19	CUSTOM ISLAND MILLWORK PIECE; COORDINATE SHOP DRAWINGS WITH ARCH. AND OWNER

SHEET - KEYNOTES	
Key Value	Keynote Text
ID-20	SOLID KICK PLATE BEHIND ARCHED TOE KICK, TYP.
ID-32	GC TO WORK WITH OWNER & VENDOR TO COORDINATE BACKSPLASH TILE PATTERN THIS LOCATION
ID-33	PAINT COLOR THIS AREA TO MATCH FINAL CABINET SELECTION COLOR; GC TO COORD. WITH OWNER, VENDOR, & ARCH.
ID-34	WALLPAPER SELECTION THIS AREA TO BE COORD. WITH OWNER & ARCH.
ID-35	GC TO COORD. WITH OWNER & ARCH. TO ENSURE THAT OPENING IN CABINET WALL IS ADEQUATELY SIZED FOR FINAL FRIDGE SELECTION
ID-36	ALL LIGHT FIXTURES ARE SHOWN FOR REFERENCE AND ARE TO BE COORD. WITH OWNER PRIOR TO INSTALLATION
ID-48	SOLID END PANEL BETWEEN FRIDGE AND CABINETS FROM FLOOR TO CROWN MOULDING

GENERAL NOTES: INTERIOR ELEVATIONS

1. ALL DIMENSIONS TO BE VERIFIED IN FIELD
2. ALL LIGHTING FIXTURES TO BE COORDINATED AND VERIFIED WITH CLIENT PRIOR TO PURCHASE AND INSTALL.

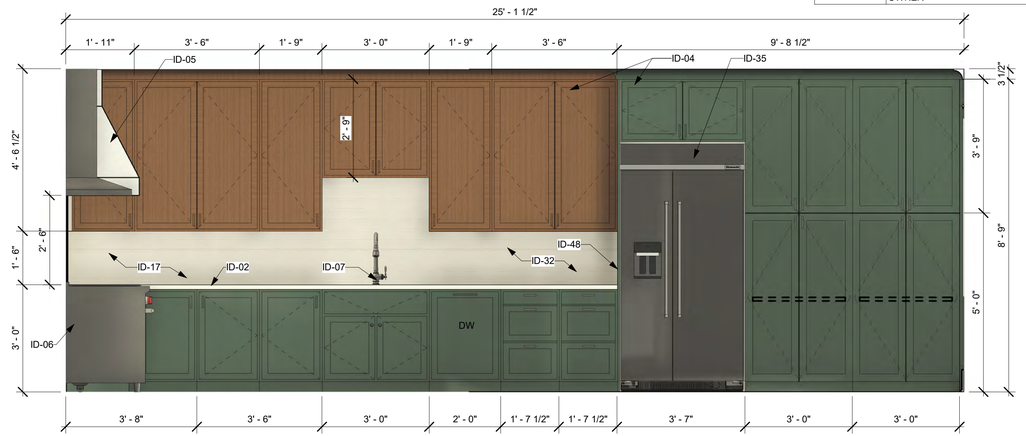

1 KITCHEN/DINING #120 (NORTH)
1/2" = 1'-0"

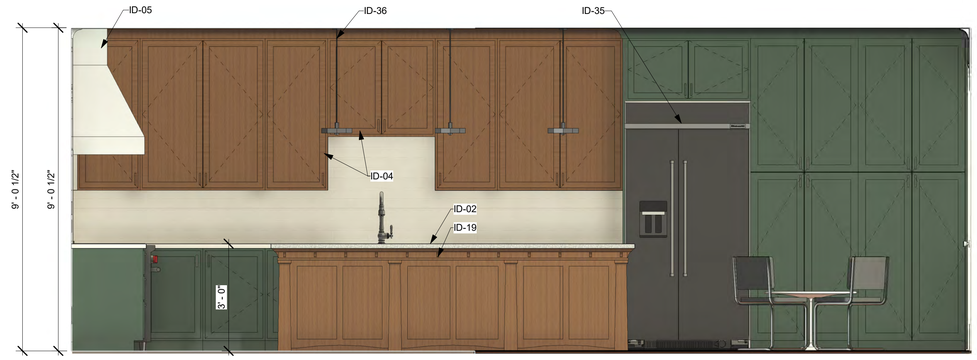

2 KITCHEN ISLAND #120 (NORTH)
1/2" = 1'-0"

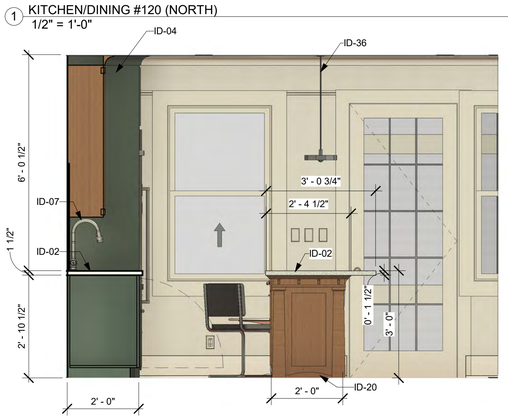

3 KITCHEN/DINING #120 (EAST)
1/2" = 1'-0"

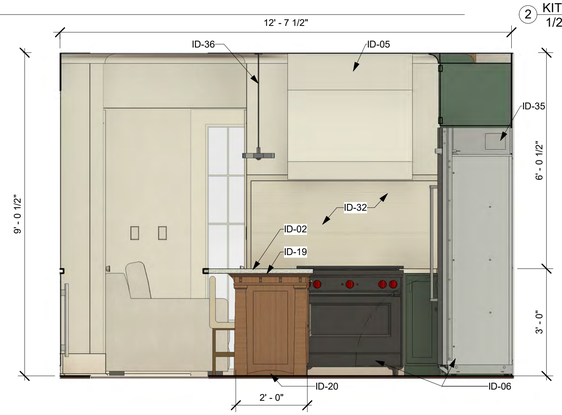

4 KITCHEN ISLAND #120 (WEST)
1/2" = 1'-0"

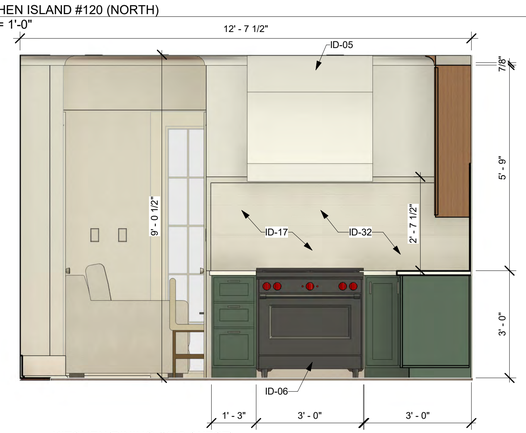

5 KITCHEN/DINING #120 (WEST)
1/2" = 1'-0"

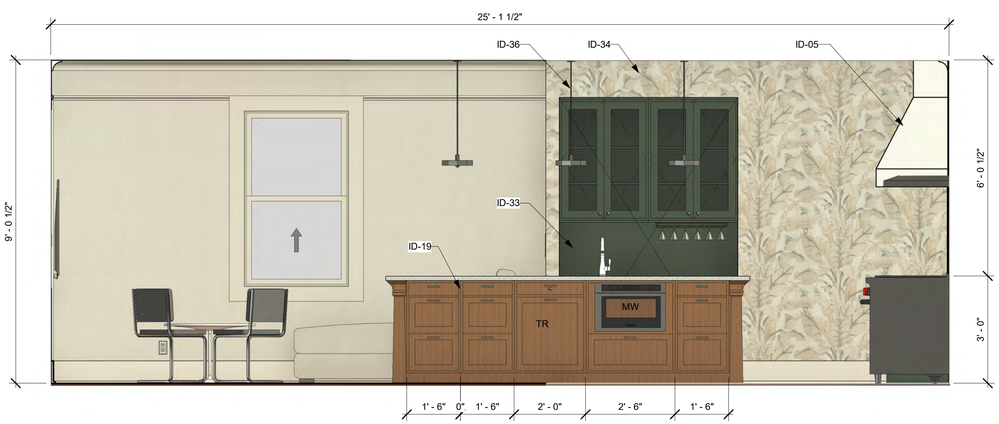

6 KITCHEN ISLAND #120 (SOUTH)
1/2" = 1'-0"

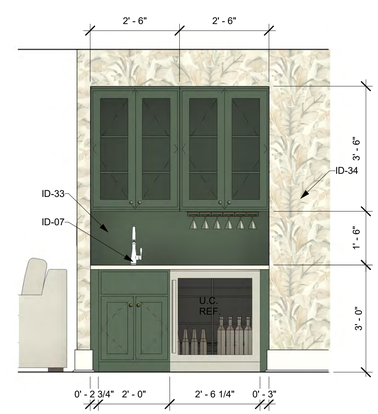

7 BAR #118 (SOUTH)
1/2" = 1'-0"

ADAMICK ARCHITECTURE
3301 CHIPPEWA STREET
NEW ORLEANS, LA 70115
504.322.1220

No.	Description	Date

20 DEC. 2024	CD-100%
16 DEC. 2024	CD-85%
18 NOV. 2024	CD-75%
28 OCT. 2024	DD-3
18 SEP. 2024	DD-2
06 SEP. 2024	DD-1
20 AUG. 2024	SD-3
30 JUL. 2024	SD-2
11 JUL. 2024	SD-1
20 JUN. 2024	EC-1

Project: #2024-19

COOK RESIDENCE RENOVATION & ADDITION

ADDRESS:
1317-1319 ADAMS ST. NEW ORLEANS, LA 70118

INTERIOR ELEVATIONS & NOTES

ALEXANDER JAMES ADAMICK
REG. NO. 8148
STATE OF LOUISIANA
REGISTERED ARCHITECT

DATE:	2/12/2025 12:52:34 PM
PROJECT NO.:	2024-19
DRAWING BY:	CH
CHECKED BY:	AJA
SHEET NO.:	A804
CAD FILE NO: 2024-19\PDF OUT\EC	34/39

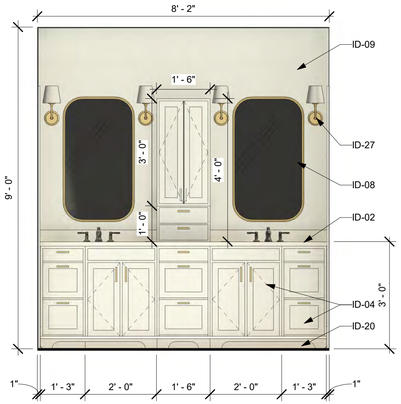

1 PRIM. BATH #117 (NORTH)
1/2" = 1'-0"

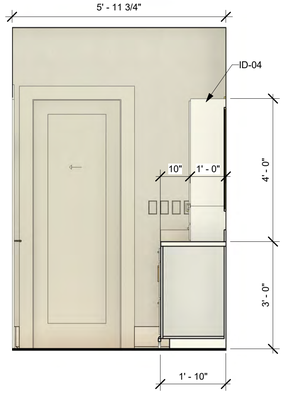

2 PRIM. BATH #117 (WEST)
1/2" = 1'-0"

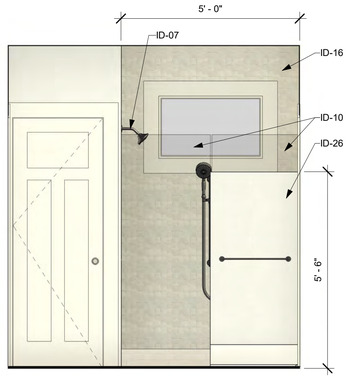

3 PRIM. BATH #117 (SOUTH)
1/2" = 1'-0"

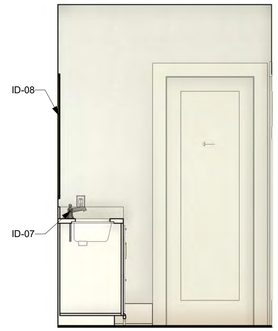

4 PRIM. BATH #117 (EAST)
1/2" = 1'-0"

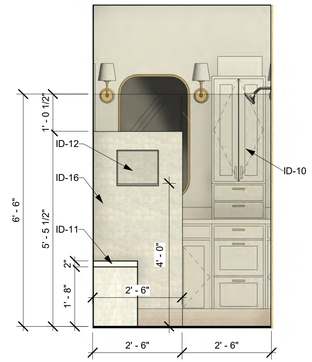

5 PRIM. SHWR #119 (NORTH)
1/2" = 1'-0"

6 WC #118 (NORTH)
1/2" = 1'-0"

7 WC #118 (EAST)
1/2" = 1'-0"

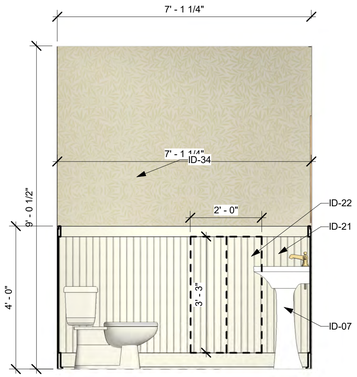

8 POWDER #112 (NORTH)
1/2" = 1'-0"

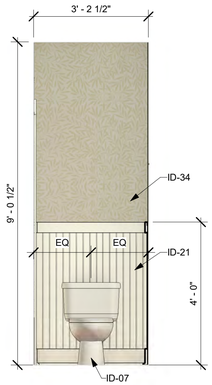

9 POWDER #112 (WEST)
1/2" = 1'-0"

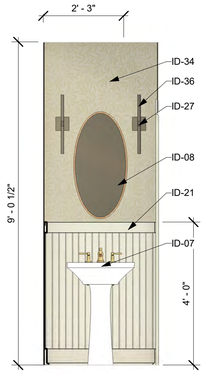

10 POWDER #112 (EAST)
1/2" = 1'-0"

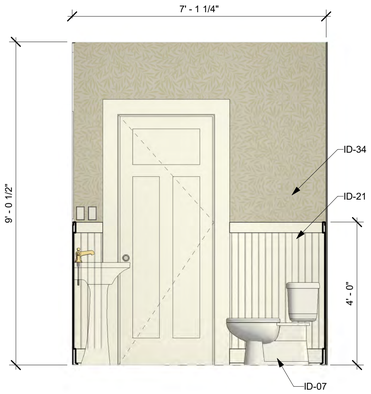

11 POWDER #112 (SOUTH)
1/2" = 1'-0"

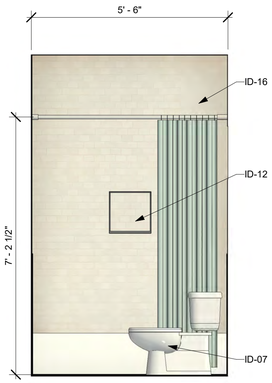

12 GUEST BATH #202 (NORTH)
1/2" = 1'-0"

13 GUEST BATH #202 (WEST)
1/2" = 1'-0"

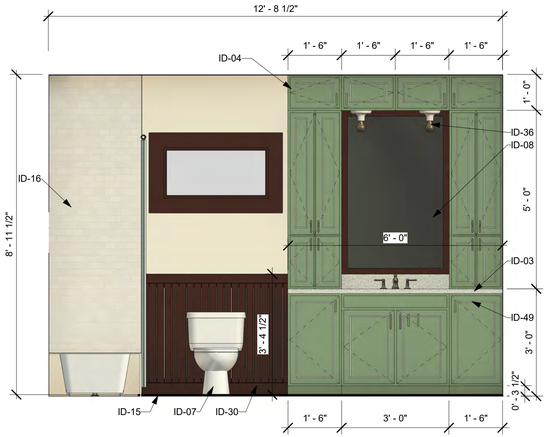

14 GUEST BATH #202 (EAST)
1/2" = 1'-0"

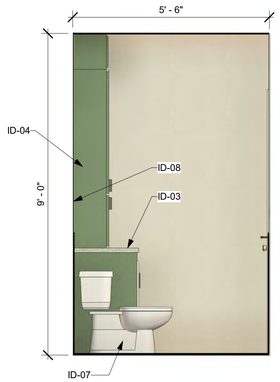

15 GUEST BATH #202 (SOUTH)
1/2" = 1'-0"

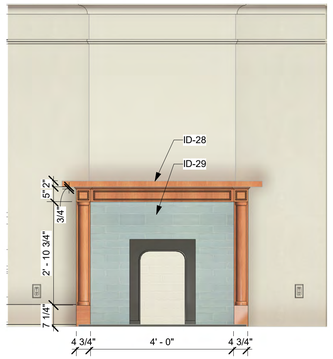

16 LIVING #109 (NORTH)
1/2" = 1'-0"

GENERAL NOTES: INTERIOR ELEVATIONS

1. ALL DIMENSIONS TO BE VERIFIED IN FIELD
2. ALL LIGHTING FIXTURES TO BE COORDINATED AND VERIFIED WITH CLIENT PRIOR TO PURCHASE AND INSTALL.

SHEET - KEYNOTES

Key Value	Keynote Text
ID-02	NEW STONE COUNTERTOP AT THIS LOCATION; GC TO COORD. SELECTIONS W/ OWNER & VENDOR AS REQ.
ID-03	NEW GRANITE COUNTERTOP AT THIS LOCATION; GC TO COORD. SELECTIONS W/ OWNER & VENDOR AS REQ.
ID-04	NEW MILLWORK; GC TO COORD. SELECTIONS W/ OWNER & VENDOR AS REQ.
ID-07	NEW PLUMBING FIXTURES AT THIS ROOM RE. MEP PLAN
ID-08	NEW BATHROOM ACCESSORIES & MIRROR AT THIS ROOM UNLESS NOTED OTHERWISE. / RE. SELECT. SCHED. FOR BATHROOM ACCESSORIES & MIRROR. TYP.)
ID-09	RE. ROOM SCHED. FOR WALL FINISHES.
ID-10	NEW FRAMELESS GLASS SHOWER ENCLOSURE & DOOR W/ FIXED GLASS PANEL; GC TO COORD. CURB & WALL DESIGN W/ OWNER
ID-11	NEW FRAMED SHOWER BENCH W/ STONE TOP; SLOPED TO DRAIN 1/4" OVER 1' MIN.; GC TO COORD. SIZE, LOCATION, & SELECTIONS W/ OWNER & VENDORS AS REQ.
ID-12	NEW SHOWER NICHE W/ STONE SILL; SLOPED TO DRAIN 1/4" OVER 1' MIN.; RE. ID
ID-15	TILE FLOORING, THIS ROOM; GROUT PER ID FINISH STANDARDS.
ID-16	TILE AT WALLS THIS ROOM, SEE INT. ELEVATIONS FOR HEIGHT; PROVIDE TILE TRIM WHERE REQ.; GROUT PER ID FINISH STANDARDS
ID-20	SOLID KICK PLATE BEHIND ARCHED TOE KICK, TYP.
ID-21	WOODEN BEADBOARD WAINSCOT THIS ROOM, SEE ID FINISH DETAILS;
ID-22	CONCEALED SHELVES BEHIND WAINSCOT. DOOR PANELS TO BE CONCEALED FRENCH DOORS ON PIANO HINGES IN BEADBOARD.
ID-26	PARTIAL HEIGHT WALL TO 5'-6" A.F.F.
ID-27	FOR SCONCE SELECTION, GC TO COORD. W/ OWNER; ELECTRICAL ROUGH-IN HEIGHT TO BE COORDINATED IN FIELD W/ OWNER + ARCH.
ID-28	EXISTING MANTLE TO BE SANDED AND RE-STAINED
ID-29	GC TO DO EXPLORATORY WORK AT FIREPLACE TO DETERMINE IF ORIGINAL BRICK IS PRESENT AND SALVAGEABLE; COORD. W/ OWNER AS REQ.
ID-30	WOODEN "STREETCAR" WAINSCOT THIS ROOM; SEE DTL 6/A801
ID-34	WALLPAPER SELECTION THIS AREA TO BE COORD. WITH OWNER & ARCH.
ID-36	ALL LIGHT FIXTURES ARE SHOWN FOR REFERENCE AND ARE TO BE COORD. WITH OWNER PRIOR TO INSTALLATION
ID-49	CABINET FACES THIS ROOM TO BE BEADED SHAKER WITH A WHITE BEAD OVER "STREETCAR GREEN" CABINETS

ADAMICK ARCHITECTURE
3301 CHIPPEWA STREET
NEW ORLEANS, LA 70115
504.322.1220

No.	Description	Date

20 DEC. 2024	CD-100%
16 DEC. 2024	CD-85%
18 NOV. 2024	CD-75%
28 OCT. 2024	DD-3
18 SEP. 2024	DD-2
06 SEP. 2024	DD-1
20 AUG. 2024	SD-3
30 JUL. 2024	SD-2
11 JUL. 2024	SD-1
20 JUN. 2024	EC-1

Project: #2024-19

COOK RESIDENCE RENOVATION & ADDITION

ADDRESS:
1317-1319 ADAMS ST. NEW ORLEANS, LA 70118

INTERIOR ELEVATIONS & NOTES

ALEXANDER JAMES ADAMICK REG. NO. 8148 STATE OF LOUISIANA REGISTERED ARCHITECT

DATE:	2/12/2025 12:52:58 PM
PROJECT NO.:	2024-19
DRAWING BY:	CH
CHECKED BY:	AJA
SHEET NO.:	A805
CAD FILE NO: 2024-19\PDF OUT\EC	35/39

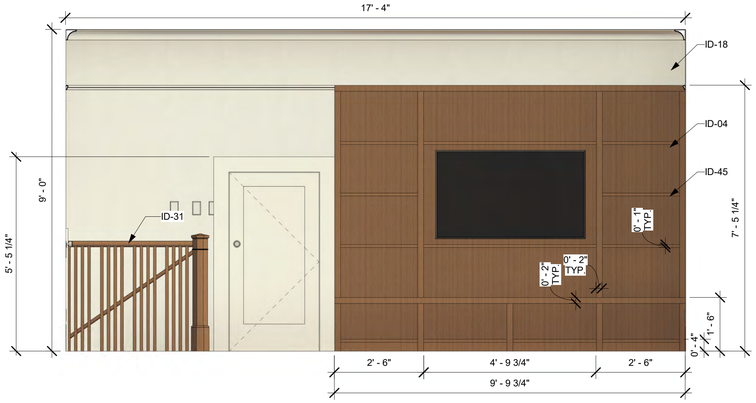

1 LANDING #201 (NORTH)
1/2" = 1'-0"

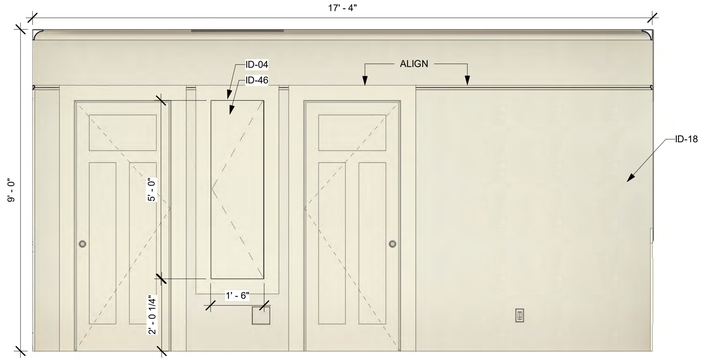

2 LANDING #201 (EAST)
1/2" = 1'-0"

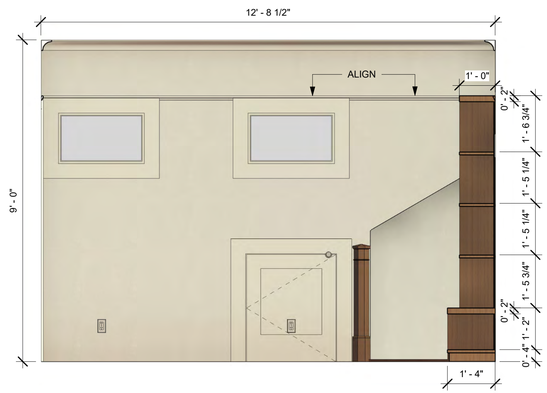

3 LANDING #201 (WEST)
1/2" = 1'-0"

4 LANDING #201 (SOUTH)
1/2" = 1'-0"

GENERAL NOTES: INTERIOR ELEVATIONS

1. ALL DIMENSIONS TO BE VERIFIED IN FIELD
2. ALL LIGHTING FIXTURES TO BE COORDINATED AND VERIFIED WITH CLIENT PRIOR TO PURCHASE AND INSTALL.

SHEET - KEYNOTES

Key Value	Keynote Text
ID-04	NEW MILLWORK; GC TO COORD. SELECTIONS W/ OWNER & VENDOR AS REQ.
ID-18	RE. ROOM MAT./FINISH SCHED. FOR LINEAR TRIM MATERIALS & FINISHES THROUGHOUT.
ID-31	WOODEN HANDRAIL THIS LOCATION; SEE DTL 2/A801
ID-45	MILLWORK TO HAVE ADJUSTABLE SHELVES ON PEGS
ID-46	LINEN CLOSET TO BE CUSTOM BUILT IN CASEWORK; TO HAVE PUSH OPEN & SOFT CLOSE HARDWARE

ADAMICK ARCHITECTURE
3301 CHIPPEWA STREET
NEW ORLEANS, LA 70115
504.322.1220

No.	Description	Date

20 DEC. 2024	CD-100%
16 DEC. 2024	CD-85%
18 NOV. 2024	CD-75%
28 OCT. 2024	DD-3
18 SEP. 2024	DD-2
06 SEP. 2024	DD-1
20 AUG. 2024	SD-3
30 JUL. 2024	SD-2
11 JUL. 2024	SD-1
20 JUN. 2024	EC-1

Project: #2024-19

COOK RESIDENCE RENOVATION & ADDITION

ADDRESS:
1317-1319 ADAMS ST. NEW ORLEANS, LA 70118

INTERIOR ELEVATIONS & NOTES

LICENSED ALEXANDER JAMES ADAMICK REG. NO. 8148 STATE OF LOUISIANA REGISTERED ARCHITECT

DATE:	2/12/2025 12:53:04 PM
PROJECT NO.:	2024-19
DRAWING BY:	CH
CHECKED BY:	AJA
SHEET NO.:	A806
CAD FILE NO: 2024-19\PDF OUT\EC	36 / 39

GENERAL NOTES: INTERIOR ELEVATIONS

1. ALL DIMENSIONS TO BE VERIFIED IN FIELD
2. ALL LIGHTING FIXTURES TO BE COORDINATED AND VERIFIED WITH CLIENT PRIOR TO PURCHASE AND INSTALL.

ADAMICK ARCHITECTURE
3301 CHIPPEWA STREET
NEW ORLEANS, LA 70115
504.322.1220

No.	Description	Date

1 KITCHEN #101 (NORTH)
1/2" = 1'-0"

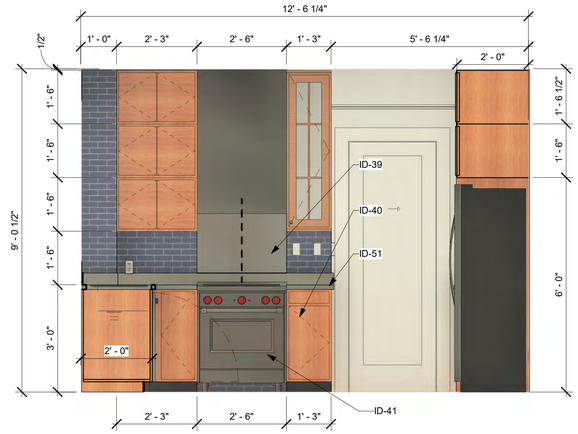

2 KITCHEN #101 (EAST)
1/2" = 1'-0"

3 KITCHEN PENINSULA #101 (EAST)
1/2" = 1'-0"

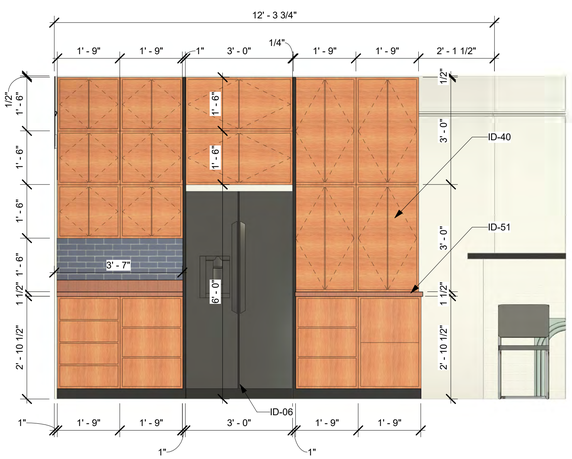

4 KITCHEN #101 (SOUTH)
1/2" = 1'-0"

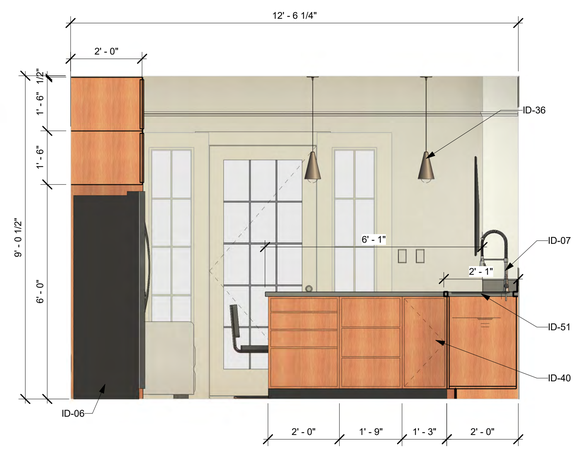

5 KITCHEN #101 (WEST)
1/2" = 1'-0"

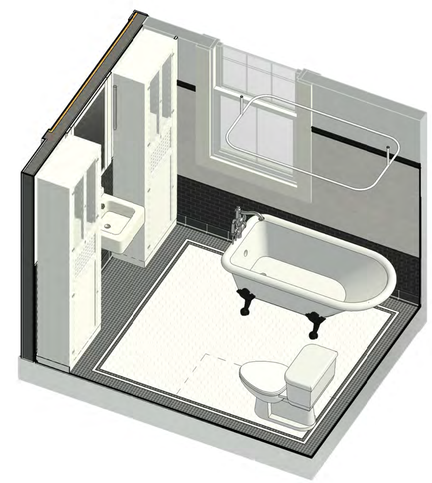

11 1319 BATHROOM AXONOMETRIC

SHEET - KEYNOTES

Key Value	Keynote Text
ID-04	NEW MILLWORK; GC TO COORD. SELECTIONS W/ OWNER & VENDOR AS REQ.
ID-06	NEW APPLIANCES AT THIS ROOM RE. MEP PLAN
ID-07	NEW PLUMBING FIXTURES AT THIS ROOM RE. MEP PLAN
ID-08	NEW BATHROOM ACCESSORIES & MIRROR AT THIS ROOM UNLESS NOTED OTHERWISE. / RE. SELECT. SCHED. FOR BATHROOM ACCESSORIES & MIRROR. TYP.)
ID-15	TILE FLOORING, THIS ROOM; GROUT PER ID FINISH STANDARDS.
ID-16	TILE AT WALLS THIS ROOM, SEE INT. ELEVATIONS FOR HEIGHT; PROVIDE TILE TRIM WHERE REQ.; GROUT PER ID FINISH STANDARDS
ID-18	RE. ROOM MAT./FINISH SCHED. FOR LINEAR TRIM MATERIALS & FINISHES THROUGHOUT.
ID-27	FOR SCONCE SELECTION, GC TO COORD. W/ OWNER; ELECTRICAL ROUGH-IN HEIGHT TO BE COORDINATED IN FIELD W/ OWNER + ARCH.
ID-36	ALL LIGHT FIXTURES ARE SHOWN FOR REFERENCE AND ARE TO BE COORD. WITH OWNER PRIOR TO INSTALLATION
ID-37	NO KICK PLATE AT THIS LOCATION; DOCKING LOCATION FOR UNDER-CABINET ROBOT VACUUM
ID-38	WINDOW JAMB AT THIS LOCATION TO PROTRUDE TO ALIGN WITH FACE OF TILE; GC TO COORD. WITH OWNER FOR TILE THICKNESS
ID-39	STAINLESS STEEL PANEL BEHIND RANGE, THIS LOCATION
ID-40	ALL CASEWORK TO BE PUSH OPEN & SOFT CLOSE HARDWARE, THIS KITCHEN
ID-41	VERIFY CLEARANCES FOR OVEN & DISHWASHER BEFORE ORDERING. CONTACT ARCH. FOR ANY DISCREPANCIES.
ID-42	CABINET PANELS THIS LOCATION TO MATCH WOOD COUNTERTOP SELECTION.
ID-44	SALVAGED MILLWORK.RE. D101 FOR EXISTING LOCATION
ID-51	NEW STAINLESS STEEL COUNTERTOP AT THIS LOCATION; GC TO COORD. SELECTIONS W/ OWNER & VENDOR AS REQ.
ID-52	CUSTOM BUILT IN MEDICINE CABINET MILLWORK

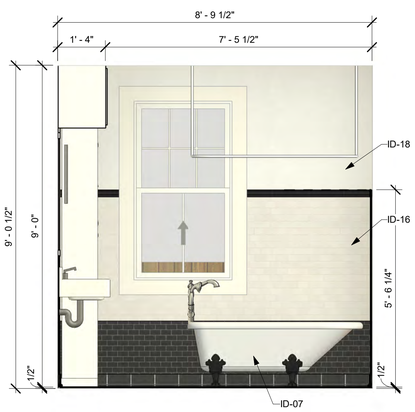

6 PRIM. BATH #105 (NORTH)
1/2" = 1'-0"

7 PRIM. BATH #105 (EAST)
1/2" = 1'-0"

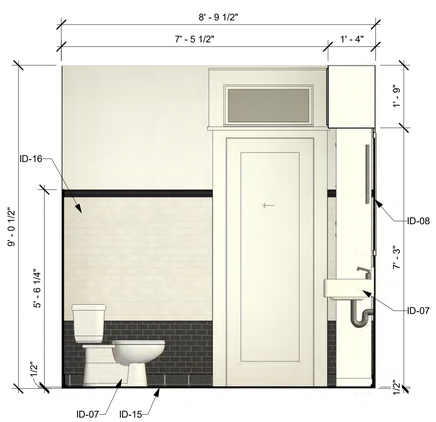

8 PRIM. BATH #105 (SOUTH)
1/2" = 1'-0"

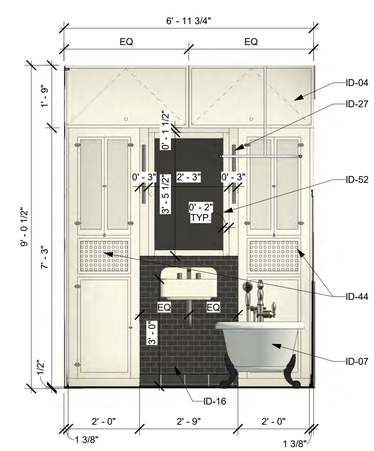

9 PRIM. BATH #105 (WEST)
1/2" = 1'-0"

20 DEC. 2024	CD-100%
16 DEC. 2024	CD-85%
18 NOV. 2024	CD-75%
28 OCT. 2024	DD-3
18 SEP. 2024	DD-2
06 SEP. 2024	DD-1
20 AUG. 2024	SD-3
30 JUL. 2024	SD-2
11 JUL. 2024	SD-1
20 JUN. 2024	EC-1

Project: #2024-19

COOK RESIDENCE RENOVATION & ADDITION

ADDRESS:
1317-1319 ADAMS ST. NEW ORLEANS, LA 70118

INTERIOR ELEVATIONS & NOTES

ALEXANDER JAMES ADAMICK
REG. NO. 8148
STATE OF LOUISIANA
REGISTERED ARCHITECT

DATE:	2/12/2025 12:53:21 PM
PROJECT NO.:	2024-19
DRAWING BY:	CH
CHECKED BY:	AJA
SHEET NO.:	A807
CAD FILE NO: 2024-19\PDF OUT\EC	37/39

1 1317 KITCHEN RENDER
12" = 1'-0"

2 1317 WET BAR RENDER
12" = 1'-0"

3 1317 MASTER BATH RENDER
12" = 1'-0"

4 1317 POWDER ROOM RENDER
12" = 1'-0"

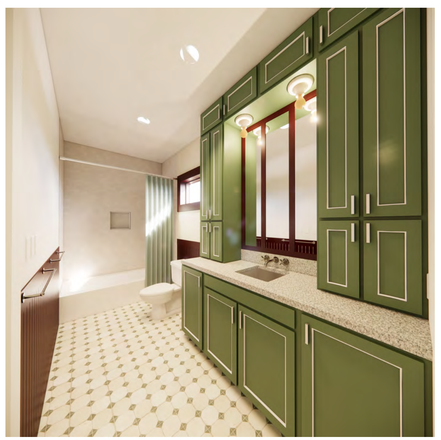

5 1317 GUEST BATH RENDER
12" = 1'-0"

6 1317 LIVING ROOM RENDER 1
12" = 1'-0"

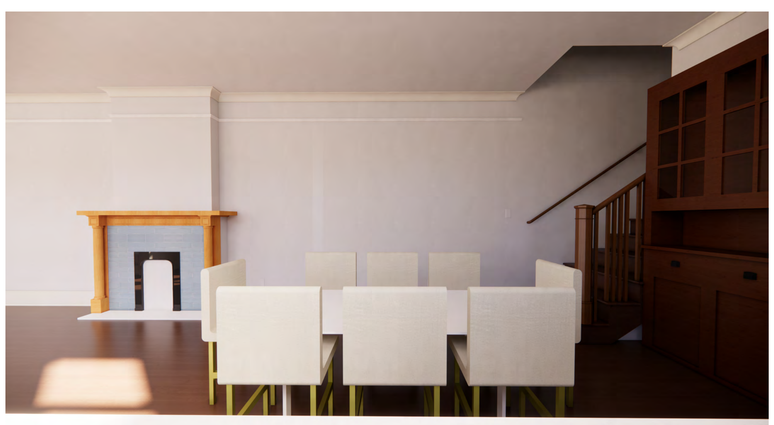

7 1317 LIVING ROOM RENDER 2
12" = 1'-0"

8 1319 KITCHEN RENDER
12" = 1'-0"

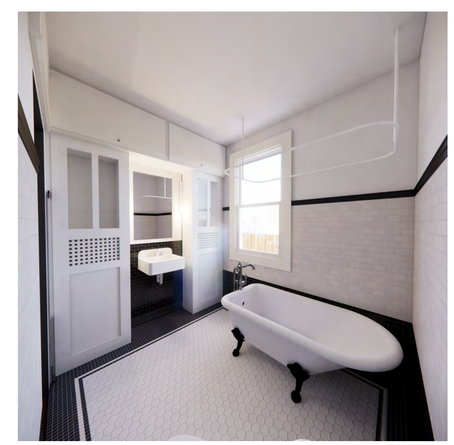

9 1319 BATHROOM RENDER
12" = 1'-0"

ADAMICK ARCHITECTURE
3301 CHIPPEWA STREET
NEW ORLEANS, LA 70115
504.322.1220

No.	Description	Date

20 DEC. 2024	CD-100%
16 DEC. 2024	CD-85%
18 NOV. 2024	CD-75%
28 OCT. 2024	DD-3
18 SEP. 2024	DD-2
06 SEP. 2024	DD-1
20 AUG. 2024	SD-3
30 JUL. 2024	SD-2
11 JUL. 2024	SD-1
20 JUN. 2024	EC-1

Project: #2024-19

COOK RESIDENCE RENOVATION & ADDITION

ADDRESS:
1317-1319 ADAMS ST. NEW ORLEANS, LA 70118

INTERIOR PERSPECTIVES

ALEXANDER JAMES ADAMICK
REG. NO. 8148
STATE OF LOUISIANA
REGISTERED ARCHITECT

DATE:	2/12/2025 12:53:25 PM
PROJECT NO.:	2024-19
DRAWING BY:	XXX
CHECKED BY:	AJA
SHEET NO.:	A808
CAD FILE NO: 2024-19\PDF OUT\EC	38/39

MEP LEGEND AND GENERAL NOTES

SYMBOL	DESCRIPTION
GENERAL ELECTRICAL	
EM	ELECTRICAL METER
EP	ELECTRICAL PANEL
EO	TRANSFER SWITCH
GM	GAS METER
ELECTRICAL RECEPTACLES	
	DUPLEX RECEPTACLE
GFI	GFI DUPLEX RECEPTACLE
WP	WET LOCATION RECEPTACLE
S	SWITCHED DUPLEX RECEPTACLE
	DEDICATED APPLIANCE RECEPTACLE
A/C	A/C DEDICATED APPLIANCE RECEPTACLE
FLR	FLUSH MOUNTED FLOOR QUAD RECEPTACLE
ELECTRICAL SWITCHES	
S	SWITCH
S3	THREE-WAY SWITCH
S4	FOUR-WAY SWITCH
SD	DIMMABLE SWITCH
S3D	THREE-WAY DIMMABLE SWITCH
SJ	JAMB SWITCH (DOOR ACTIVATED)
ELECTRICAL FIXTURES	
R	RECESSED CAN FIXTURE
RD	RECESSED DIRECTIONAL CAN FIXTURE
D	RECESSED DAMP - RATED CAN FIXTURE
V	RECESSED VAPOR PROOF CAN FIXTURE
W	RECESSED WATER - RATED CAN FIXTURE
RS	RECESSED SPOT CAN FIXTURE
	CEILING MOUNTED FIXTURE
	WALL MOUNTED FIXTURE
	CHANDELIER/PENDANT
PC	FIXTURE, PULL CHAIN OPERATED
FLR	RECESSED FLOOR FIXTURE
	UNDER CABINET FIXTURE
	LIGHTING TRACK
	LINEAR FIXTURE
	CEILING FAN
	CEILING FAN WITH LIGHTS
GAS FIXTURES	
G	GAS CEILING MOUNTED FIXTURE
G	GAS WALL MOUNTED FIXTURE
G	GAS CHANDELIER/PENDANT
AUDIO & VISUAL SYSTEMS	
C	CABLE TELEVISION OUTLET/SOURCE

SYMBOL	DESCRIPTION
MECHANICAL SYSTEMS	
EF	EXHAUST FAN
EFL	EXHAUST FAN W/ LIGHT
EFH	EXHAUST FAN W/ HEATER
EFL&H	EXHAUST FAN W/ LIGHT & HEATER
	RADIANT IN-FLOOR WARMING MAT
RF	RADIANT IN-FLOOR CONTROLS
T	THERMOSTAT
R/A	RETURN AIR GRILLE OR REGISTER AT WALL
S/A	SUPPLY AIR GRILLE OR REGISTER AT WALL
R/A	RETURN AIR CHASE
S/A	SUPPLY AIR CHASE
	RETURN AIR GRILLE OR REGISTER AT CEILING
	SUPPLY AIR GRILLE OR REGISTER AT CEILING
	A/C CONDENSOR
PUMBING SYSTEMS	
G	GAS LINE
W/H	TANKLESS WATER HEATER
W/H	TANK WATER HEATER
W	DEDICATED WATER LINE
HB	HOSE BIB
GD	GARBAGE DISPOSAL
SECURITY SYSTEM	
M/P	MOTION SENSOR PHOTOVOLTAIC FLOOD LIGHTS
MISCELLANEOUS SYSTEMS	
DB	DOOR BELL BUTTON
DC	DOOR BELL CHIME
G	GARAGE DOOR OPENER
GD	GARAGE DOOR REMOTE OPENER
FIRE & LIFE SAFETY SYSTEM	
H	HEAT DETECTOR
S	SMOKE DETECTOR
S/C	SMOKE & CO2 DETECTOR UNIT
T	TEMPERATURE SENSOR
CO	CARBON MONOXIDE DETECTOR
FE	FIRE EXTINGISHER
F	FIRE ALARM PULL SYSTEM
	EXIT SIGN W/ EMERGENCY LIGHTING
E/E	EMERGENCY LIGHTING

GENERAL NOTES: M.E.P. DIAGRAM

1. ELECTRICIAN SHALL:
   - A. COORDIANTE CAPACITY AND TYPE OF SWITCHES AND RECEPTACLES W/ CORRESPONDING CIRCUITS, AS REQUIRED BY PROPOSED ELECTRICAL PLANS.
   - B. CONCEAL ALL NEW AND EXISTING ELECTRICAL CIRCUITS THROUGHOUT.
   - C. PROVIDE LOW VOLTAGE RELAYS, AS REQUIRED, FOR ALL SWITCHES HAVING MORE THAN 1350 WATTS.
   - D. COORDINATE GANGING OF WALL PLATES FOR CLUSTERS OF SWITCHES AND RECEPTACLES, AS REQUIRED BY PROPOSED ELECTRICAL PLANS.
   - E. INSTALL RECEPTACLES AND OUTLETS IN A VERTICAL FASHION, UNLESS OTHERWISE NOTED.
   - F. PROVIDE PLATES AND DEVICES IN WHITE THROUGHOUT, UNLESS OTHERWISE NOTED.
   - G. PROVIDE CUTS OF ALL PLATES & DEVICES AND ELECTRICAL FIXTURES FOR APPROVAL OF ARCHITECT & OWNER, PRIOR TO INSTALLATION.
   - H. PROVIDE ALL PLATES & DEVICES AND UNSPECIFIED ELECTRICAL FIXTURES.
   - I. PROVIDE POWER TO ALL MECHANICAL EQUIPMENT AND DEVICES AS REQUIRED.
3. MECHANICAL AND ELECTRICAL CONTRACTOR MUST CHECK OWNER'S PRESENT EQUIPMENT BEING RE-USED, EQUIPMENT SUBSTITUTED FOR SPECIFIED TYPE OR MANUFACTURER OR THAT EQUIPMENT MARKED (BY VENDOR) WHICH IS BEING SUPPLIED BY OTHERS SO THAT THE SERVICE REQUIREMENTS ARE CORRECTLY TYPED, ADEQUATELY SIZED, & ROUGHED IN PROPERLY (LOCATION, HEIGHT, & CONNECTION TYPE) SO AS TO MINIMIZE THE AMOUNT OF MATERIALS & FITTINGS NEEDED FOR FINAL HOOK UP RESULTING IN A NEAT AND ORDERLY LOOKING JOB.
4. ALL LABOR, SWITCHES, DISCONNECTS, & FITTINGS REQUIRED FOR FINAL CONNECTION OF EQUIPMENT AS NECESSARY TO COMPLY WITH ALL CODES, INCLUDING ALL INTERWIRING TO BE FURNISHED BY ELECTRICAL CONTRACTOR UNLESS OTHERWISE STATED.
5. ALL LABOR, VALVES,TRAPS, TAILPIECES, STRAINERS,PRESSURE REDUCING VALVES, & FITTINGS REQUIRED FOR FINAL CONNECTION OF EQUIPMENT AS NECESSARY COMPLY WITH ALL CODES, INCLUDING ALL INTERCONNECTIONS TO BE FURNISHED BY MECHANICAL CONTRACTOR UNLESS OTHERWISE STATED.
6. PRIOR TO PURCHASE OF EXTERIOR LIGHT FIXTURES, G.C. SHALL SUBMIT MANUFACTURERS TO HDLC & OWNER FOR APPROVAL.

ADAMICK ARCHITECTURE
3301 CHIPPEWA STREET
NEW ORLEANS, LA 70115
504.322.1220

No.	Description	Date

20 DEC. 2024	CD-100%
16 DEC. 2024	CD-85%
18 NOV. 2024	CD-75%
28 OCT. 2024	DD-3
18 SEP. 2024	DD-2
06 SEP. 2024	DD-1
20 AUG. 2024	SD-3
30 JUL. 2024	SD-2
11 JUL. 2024	SD-1
20 JUN. 2024	EC-1

Project: #2024-19

COOK RESIDENCE RENOVATION & ADDITION

ADDRESS:
1317-1319 ADAMS ST. NEW ORLEANS, LA 70118

M.E.P. LEGEND & GENERAL NOTES

ALEXANDER JAMES ADAMICK
REG. NO. 8148
STATE OF LOUISIANA
REGISTERED ARCHITECT

DATE:	2/12/2025 12:53:26 PM
PROJECT NO.:	2024-19
DRAWING BY:	IF
CHECKED BY:	AJA
SHEET NO.:	A900
CAD FILE NO: 2024-19\PDF OUT\EC	39/39

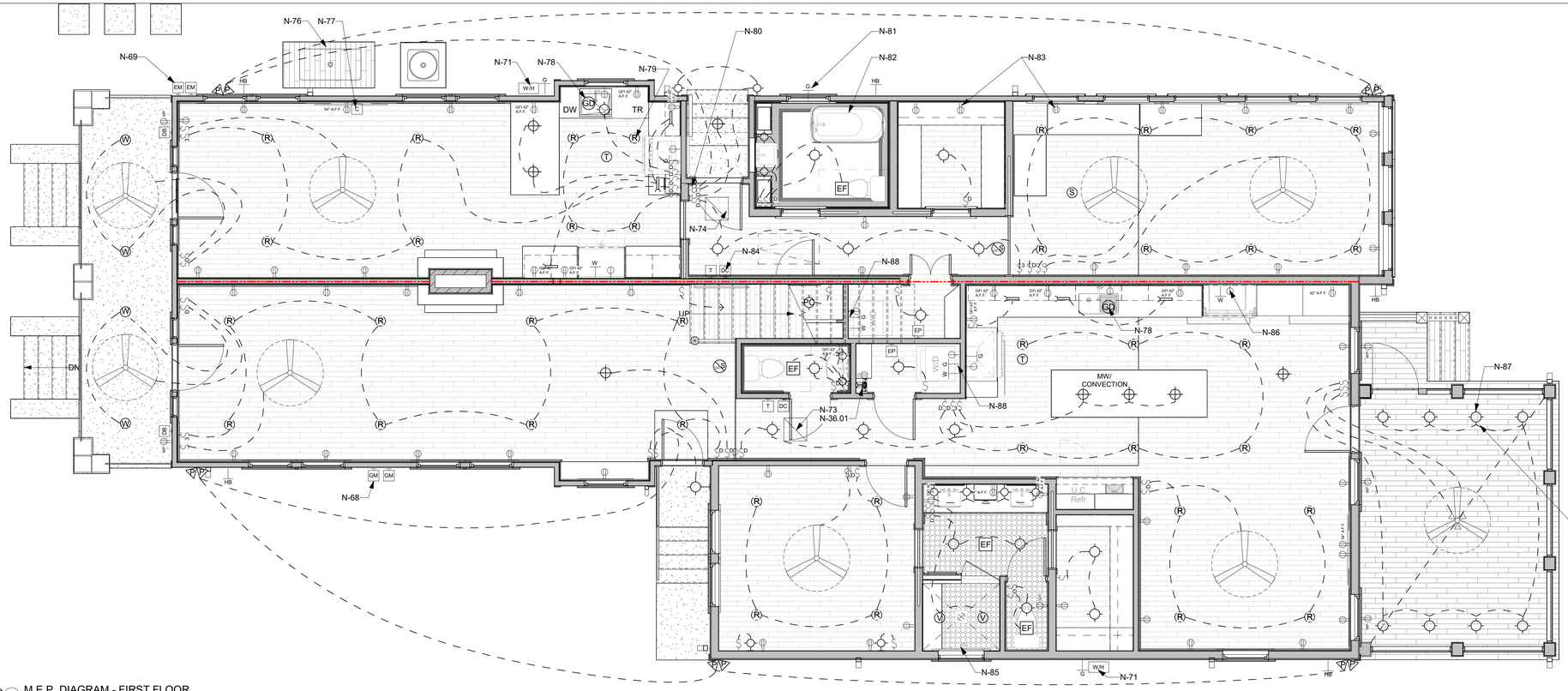

1 M.E.P. DIAGRAM - FIRST FLOOR
1/4" = 1'-0"

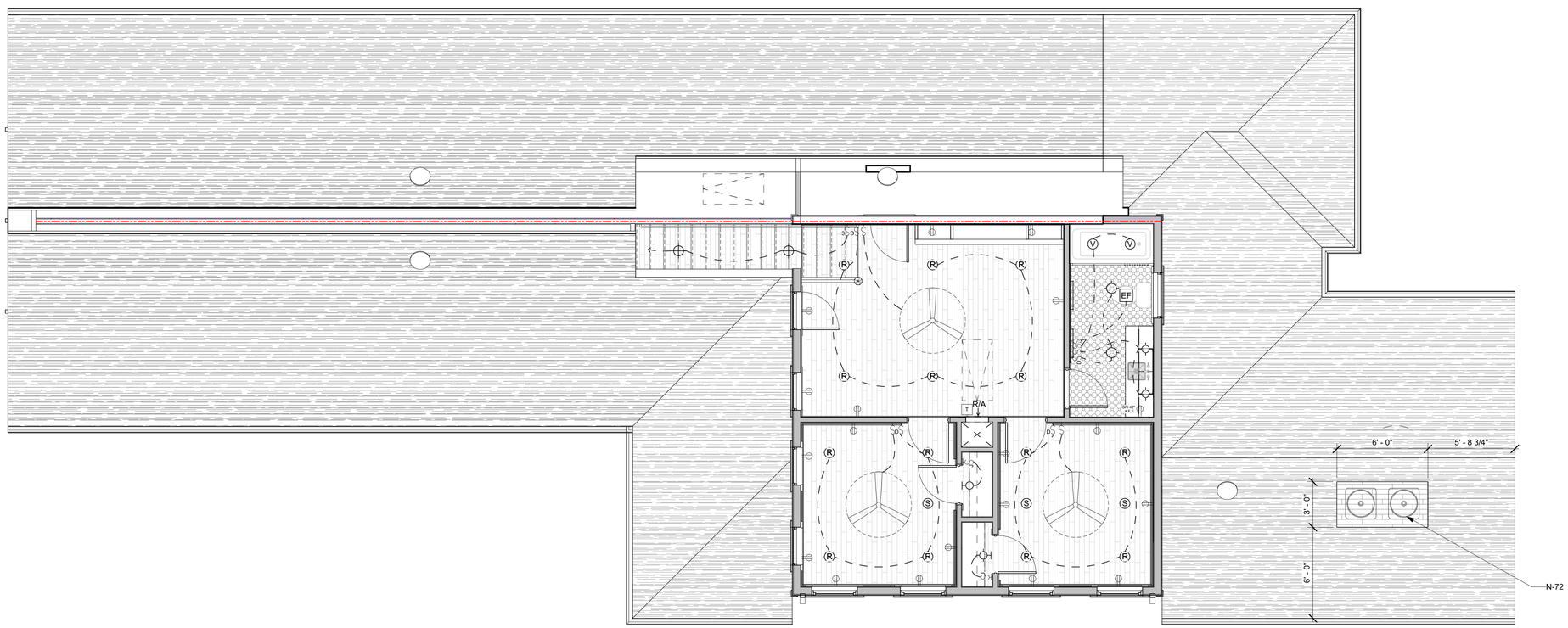

2 M.E.P. DIAGRAM - SECOND FLOOR
1/4" = 1'-0"

SHEET - KEYNOTES	
Key Value	Keynote Text
N-36.01	BLOCKING AND OUTLET AT THIS WALL FOR WALL-MOUNTED VACUUM; COORD. HEIGHT IN FIELD W/ OWNER
N-68	EXIST. LOCATION OF GAS METER.
N-69	EXIST. LOCATION OF ELECTRICAL METER. ELECTRICIAN TO RESIZE PANELS FOR ADDITIONS.
N-71	NEW TANK LESS GAS W.H. AT THIS LOCATION; PLUMBER TO SIZE & PROVIDE DEDICATED GAS LINE.
N-72	NEW 16 SEER A/C CONDENSER ON METAL PLATFORM CURB MOUNTED TO ROOF. PROVIDE REQ. CLEARANCES I.A.W. CODE.
N-73	NEW RETURN AIR AT CEILING. FIRST FLOOR; (GC TO COORD. SIZE & LOCATION W/ HVAC INSTALLER.)
N-74	PROVIDE 10' RUN AT AIR RETURN PRIOR TO AIR HANDLER.
N-76	GENERAC GENERATOR AT THIS LOCATION TO POWER 1319 SIDE.
N-77	TO DIGITAL ANTENNA IN ATTIC.
N-78	BUTTON FOR GARBAGE DISPOSAL AT SINK.
N-79	4" CANS AT THESE LOCATIONS ONLY.
N-80	ELECTRICIAN TO PROVIDE LABEL AT SWITCH FOR MOTION LIGHTS.
N-81	QUICK "Y" DISCONNECT AT THIS LOCATION.
N-82	PROVIDE TIMER AT SWITCH FOR FAN.
N-83	PROVIDE DIRECT RUN TO PANEL AT THESE OUTLETS.
N-84	USE THIS OUTLET FOR NEST DOOR CHIME.
N-85	PROVIDE SEPARATE VALVES FOR EACH SHOWER FAUCET.
N-86	OUTLET FOR REF. TO BE WIRED TO 1319 METER TO ALLOW FOR EMERGENCY POWER.
N-87	LOW VOLTAGE UP LIGHTS W/ TRANSFORMER AT PORCH CLG
N-88	PROVIDE RECESSED DRYER RECEPTACLE BEHIND WASHER/DRYER.

ADAMICK ARCHITECTURE
3301 CHIPPEWA STREET
NEW ORLEANS, LA 70115
504.322.1220

No.	Description	Date

20 DEC. 2024	CD-100%
16 DEC. 2024	CD-85%
18 NOV. 2024	CD-75%
28 OCT. 2024	DD-3
18 SEP. 2024	DD-2
06 SEP. 2024	DD-1
20 AUG. 2024	SD-3
30 JUL. 2024	SD-2
11 JUL. 2024	SD-1
20 JUN. 2024	EC-1

Project: #2024-19

COOK RESIDENCE RENOVATION & ADDITION

ADDRESS:
1317-1319 ADAMS ST. NEW ORLEANS, LA 70118

FIRST & SECOND FLOOR M.E.P. DIAGRAM & NOTES

ALEXANDER JAMES ADAMICK
REG. NO. 8148
STATE OF LOUISIANA
REGISTERED ARCHITECT

DATE:	2/12/2025 12:53:30 PM
PROJECT NO.:	2024-19
DRAWING BY:	IF
CHECKED BY:	AJA
SHEET NO.:	A901
CAD FILE NO: 2024-19\PDF OUT\EC	40/39

CITY OF NEW ORLEANS
CITY OF NEW ORLEANS

1317
1319
20170220 1066

1319

1317

1319
1319
1317

1319

ADAMICK ARCHITECTURE
3301 CHIPPEWA ST. ▪ NEW ORLEANS, LA 70115
504.322.1220 ▪ ADAMICKARCHITECTURE.COM

Wednesday February 12, 2025

1317 Adams St.
CPC Compliance Statement

Dear Planning Commission,

I am writing today to express our belief that the proposed addition to 1317 Adams Street is aligned with the *design review approval standards* in producing a project which harmoniously adds to the rich character of the neighborhood.

The proposed project is a renovation and addition to a residential duplex (1317 + 1319 Adams) in the Carrollton neighborhood which will add 905 SQ.FT. of addition to the ground floor of the building and a partial camelback which will add 694 SQ.FT. to the building on the 1317 Adams Street side.

The camelback roofline is set back from the front roofline of the building by just over 50', thus minimizing its visual presence from the street. The camelback also incorporates historical detailing which is aligned with that of the original front façade.

Furthermore, the neighboring house at 1329 Adams Street has an existing camelback, similar in height to the proposed 1317 Adams Street camelback. On the opposite neighboring side, Adams Street Grocery and Deli has a tall commercial façade with no front yard setback, contributing to a more dense urban character to the block face.

The existing duplex provides 4 total bedrooms. The proposed project will also provide 4 bedrooms, so there will be no reduction in bedrooms.

At the proposed project, we have one existing parking space to remain. No parking spaces are to be added or subtracted, since there will not be any new bedrooms. We will also be adding TrueGrid permeable pavers with the goal of facilitating the efficient recharge of groundwater and on-site water retention.

We believe that the proposed project at 1317 Adams Street provides a meaningful contribution to the existing character of the surrounding neighborhood and is aligned with the goals of University Area Design Overlay.

If you have any questions, please do not hesitate to contact us via email or phone.

Regards,

Alexander Adamick

CITY OF NEW ORLEANS
ONE STOP
PERMITS & LICENSES

Building/Construction
Related Permit

Date _____	Received by _____
Tracking Number _____	

DEVELOPMENT PLAN AND DESIGN REVIEW APPLICATION

REQUIRED ATTACHMENTS (One digital copy)

1. SITE PLAN

- North arrow, scale, and date of plan
- Location, dimensions, and area of permeable open space
- Name, address of the professional who prepared the plan
- Legend of symbols, patterns, and abbreviations used
- The entire lot(s), including area and property lines dimensioned (including gross area of the site)
- Curb cuts, interior streets, driveways, and parking and loading areas with dimensions and total area (sf)
- Location and dimensions of buildings and structures, including total floor area and distance from property lines
- Location of adjacent buildings
- Location of refuse storage locations
- Proposed right-of-way improvements including sidewalks and plantings, and pedestrian walkways
- Fence location, height, and materials

2. FLOOR PLAN

- Indicating the dimensions and square footage of proposed development
- Room use
- Location of all walls, doors, and windows
- Location of all plumbing fixtures
- Location of major appliances/mechanical equipment
- Stairway location
- Firewall location (if applicable)

3. ARCHITECTURAL ELEVATIONS

- Architectural elevations of each side of the proposed structure drawn to scale indicating height, ground floor ceiling, ground floor transparency, architectural elements, materials, colors, and textures proposed for any structures.

4. LIGHTING PLAN

- Location of all exterior lighting, including those mounted on poles and walls
- Types, style, height, and the number of fixtures
- Manufacturer's illustrations and specifications of fixtures

5. SIGNAGE PLAN N/A

- Proposed Signage with overall height, width, and materials
- Building Elevation (including building width and height)
- Site plan showing the location of all proposed detached sign(s) along with setback dimensions.

6. LANDSCAPE PLAN N/A

- Name and address of professional who prepared the plan.
- Landscape plans shall be prepared by a registered landscape architect licensed by the Louisiana Horticulture Commission
- All landscape plans shall meet the minimum requirements of site plans
- Legend defining all symbols, patterns, and abbreviations used
- Location, quantity, size, name, and condition (both botanical and common) of all existing and proposed plant materials and trees.
- Description of all tree preservation measures on-site and in the public right-of-way
- Width, depth, and area of landscaped area(s)
- Proposed right-of-way improvements and pedestrian walkways

Planting proposed in the right-of-way must have Parks and Parkways approval

7. PHOTOS

- Photographs of the subject site and/or building

8. NARRATIVE

- Narrative addressing compliance with applicable Comprehensive Zoning Ordinance requirements and design goals

9. COLOR ELEVATIONS/RENDERING (DAC ONLY)

- Color elevations and/or renderings are required for projects that trigger review by the Design Advisory Committee

10. SUPPLEMENT 'A' (UNIVERSITY AREA DESIGN OVERLAY)

- Additional submittal requirements for the University Area Design Overlay

FEES

Design Review	$225
CBD Demolitions	$500
Moratorium Appeals	$1,000